DEVELOPMENT PERMIT APPLICATION

DEV- 12-16-2789
RECEIVED 12/15/16
PAID $50 ck 2120

SAN MIGUEL COUNTY - PLANNING DEPARTMENT
P.O. Box 548, Telluride, CO 81435
Phone (970) 728-3083 - Fax (970) 728-3098 - www.sanmiguelcountyco.gov

COUNTY AND STATE CODES COMPLIANCE VERIFICATION AND DEVELOPMENT PERMIT

APPLICATION FEE: $50

Compliance with applicable County Land Use Code and State codes criteria must be verified by the Planning Director prior to consideration of applications for building permits and Development Permits. **ATTACH ONE COMPLETE SITE AND ACCESS PLAN, INCLUDING ROAD DIMENSIONS, BUILDING ENVELOPE, FLOOR PLANS, AND PLACEMENT OF UTILITIES.**

APPLICANT SHALL COMPLETE: **Contact email address:** Stephnib@rpowerc.com

San Miguel County
Property Owner

(970) 903-3696
Phone

P.O. Box 548, Telluride, CO 81435
Mailing Address/City/State/Zip Code

(970) 259-1709
Fax

Ilium Rd and Galloping Goose Trail
Subject Property Address

No specific parcel ID number -
12-Digit Parcel ID Number

Forestry/Ag. & Affordable Housing
Zone District

T42N, R9W, Sections 6, 7 and 18: T43N, R9W, Sections 31 & 32.
Legal Description, Proof of Ownership **and** Authorization *(required if Applicant is not Owner)*, must be Attached

Existing Use(s) Vacant Land/Open Space

Lot Size – Acres or Square Feet 1.38 ac

Proposed Use(s) **(Specific To Project) San Miguel Power; 24.9kV underground electric distribution power line with above ground appurtenances i.e. splice cabinets.**

Existing sq. ft. n/a
Proposed sq. ft. n/a
Proposed Bldg. Height n/a
# of Parking Spaces n/a

Retaining Wall Height N/A (4) Accessory Structure sq. ft. N/A (200)

Fence Height N/A (6) Greenhouse sq. ft. N/A (500)

Proposed Setbacks: Front N/A R Side ____ L Side ____ Rear ____

Proposed Water Supply N/A

Proposed Sewage Disposal System N/A

Existing Solid-fuel Burner ____

Proposed Solid-fuel Burner ____

I hereby certify, subject to penalty of perjury, that the above is true and accurate to the best of my knowledge and that I understand all provisions of County and State codes applicable to the proposed development, any and all conditions placed upon the proposed development by the Board of County Commissioners and all information requested by this document. I also understand that if I violate any applicable provisions of County and/or State codes, I may be required to remedy such violation(s) through appropriate legal process imposed by the County, including moving or removing structures and ceasing of construction and/or uses.

Stephni Balzly, Agent for San Miguel Power Association
Owner's Name/Owner's Representative Name

(970) 903-3696
Owner's Representative Contact Number

Agent
Signature of Owner or provide letter of authorization from Owner

12/15/16
Date

IN ORDER TO PROCESS YOUR APPLICATION IN A TIMELY MANNER
ALL INFORMATION ABOVE MUST BE COMPLETED PRIOR TO SUBMITTAL

DEVELOPMENT PERMIT CONDITIONS

Additional conditions may apply; see your Development Permit Approval

The following items apply to your Development Permit application:

_____ Bear proof garbage containers are required per Land Use Code Section 5-407 A. XI. and Article 6:

Bear Proof Container – an enclosed structure (such as a garage, barn, shed) or waste management metal container with bear proof latch.

_____ Prohibition of reflective materials, such as highly reflective glass or metals per Land Use Code Section 5-21

_____ Shielding of exterior lighting to prevent direct visibility of light bulbs from off-site, directing all exterior lighting toward either the ground or the surface of a building and prohibiting high intensity sodium vapor and similar lighting, per Land Use Code Section 5-21

_____ A revegetation plan (with native species) and a weed control plan for disturbed soils shall apply to all Development Permits issued and shall be approved by the County.

_____Driveways must comply with Land Use Code 5-502 DD. Standards.

The following Wildlife Habitat items may apply to your Development Permit application:

_____ Fencing must comply with Land Use Code Section 5-407 A. X. (Fencing requires a Development Permit)

_____ Dogs - If a property owner has dogs on site please refer to Land Use Code Section 5-407 XII.:
Barking dogs, dogs at large, and stray dogs are not permitted in any unincorporated portion of San Miguel County pursuant to Board of County Commission Resolution 1982-27 or as may be set forth in the most current Board of County Commissioner Resolution regarding dog or animal control rules and regulations.
and Section XIV.:
It is illegal for dogs to chase and/or harass wildlife, on public or private property. A Colorado wildlife officer or other peace officer may capture or kill any dog he or she determines to be harassing wildlife, pursuant to C.R.S. §33-6-128.

Please call the San Miguel County Planning Department if you would like further information or clarification on any of the above items.

San Miguel County Planning Department
P.O. Box 548
Telluride, CO 81435
970-728-3083 phone
970-728-3098 fax
Email: karenh@sanmiguelcountyco.gov

Telluride/Mtn. Village Reliability Project - Narrative

Project Summary

San Miguel Power Association, Inc. (SMPA) and Tri-State Generation and Transmission Association, Inc. (Tri-State) propose the construction of the Telluride/Mountain Village Reliability Project, which will increase and improve reliability of the existing electric system serving the Telluride and Mountain Village communities and other rural customers in the region. The project includes construction of two underground distribution express circuits, a fiber optic cable between SMPA's Sunshine substation and SMPA's Telluride substation, the replacement of the majority of the existing overhead down valley distribution circuit with a new underground circuit co-located in the same trench with the two new express circuits, replacement of existing overhead customer services along Ilium Road and removal of the existing overhead distribution power line.

The Sunshine substation is located just east of San Miguel County Road 63L (also known as Ilium Road), near the Ames Power Plant. The Telluride substation is located west of the Town of Telluride (Telluride) adjacent to Telluride's waste water treatment plant, near Society Turn. Most electric loads in the Telluride and Mountain Village areas are served from the Telluride substation, while other rural customers in the area including Ophir, Rico and the down valley communities of Sawpit and Placerville are served from the Sunshine substation. Construction of the new circuits will provide SMPA with a backup power source for the Telluride substation.

Need for the project

The Telluride area has grown from a small mountain community with a modest ski area into the Towns of Telluride and Mountain Village known for its destination ski resort in the winter and an extensive festival schedule in the summer. Accordingly, the electric loads in the area have grown significantly. SMPA has made additions and modifications to the electric system over the years to provide the necessary capacity to serve the increased demand for electricity.

A recent upgrade of the (SMPA or Tri-State) transmission system in the area provided looped (redundant), transmission feeds to the Sunshine substation but permit restrictions left the Telluride substation on a radial transmission line with limited backup. Providing a redundant or backup feed to the Telluride substation is a high priority for Tri-State and SMPA and will allow them to reliably serve the towns of Telluride, Mountain Village and the associated ski resort. The improved redundant system will alleviate power outages such as the 2 day outage experienced by these communities earlier in the year.

Tri-State and SMPA desire to construct a dedicated distribution tie between the Sunshine and Telluride substations with the capacity to back-up the transmission system currently serving the Telluride substation. Both parties agree that the proposed underground distribution express circuit solution is the best alternative to provide the backup electric source. These dedicated express circuits are designed to accommodate current and future load growth at the Telluride substation. SMPA will own, operate, and maintain the new circuits. Tri-State will assist in financing the project due to its inability to provide looped transmission to the Telluride substation. This is consistent with Tri-State policies regarding service reliability for its members.

Project Description
EXHIBIT "A"

The project will consist of utilizing the existing conduits near the Sunshine substation (previously installed by SMPA) as well as excavation and installation of new conduits in a duct bank for the length of the project between the two substations (approximately 5.7 miles). The proposed underground duct bank (a duct bank is a series of conduits) will include all conduits needed for the two dedicated express circuits and the Down Valley circuit, a conduit for telecommunications (fiber optic) plus spare conduits. New distribution cables will be pulled through the conduits and terminated into the Sunshine and Telluride substations, which have room to accept the new dedicated circuits. Neither substation will be expanded beyond existing substation boundaries. Splice points for the dedicated circuits will typically be in concrete, subsurface vaults. The Down Valley distribution circuit will utilize surface-mounted cabinets to facilitate operations and maintenance necessary for providing service to members along this line. Please review the included design and detail sheets for additional information.

A multi-strand fiber optic cable will also be installed between Sunshine and Telluride substations in the proposed duct bank. Tri-State and SMPA will use some of the fiber strands for internal utility communications. Such communications include remote monitoring and status of substation and distribution equipment and dedicated phones for communications back to SMPA and Tri-State dispatch centers for utility workers at these substations. The cable will include additional spare fibers, which could be used for commercial purposes as part of the regional efforts for broadband service.

The existing overhead Down Valley circuit is currently underbuilt on the Tri-State overhead 115 kV transmission line. This underbuilt distribution line will be removed and replaced with the new underground Down Valley circuit and services to existing consumers along Ilium Road will be replaced underground. The underbuilt circuit will be removed including all conductors, cross-arms and hardware associated with the underbuild. The Tri-State 115kV transmission line will not be modified.

Project Access
EXHIBIT "B"

Access to the construction area will be via Ilium Road, cross country where the underground alignment is adjacent to the overhead transmission line and via the Galloping Goose trail.

That portion of the Galloping Goose trail located west of Skunk Creek will be accessed using an existing undeveloped road through and adjacent to Two Rivers. This road is currently being used by several utility operators to access the water tank, natural gas pipeline, transmission power line and distribution power line. The portion of the Galloping Goose trail located east of Skunk Creek will be accessed from the trailhead parking lot adjacent to Society Dr.

Easement acquisition
EXHIBIT "C"

All (but one) necessary private easements required for the construction of the main line have been acquired. SMPA is currently in negotiations with the final land owner for the last necessary easement. The customer services that will be provided off of the underground distribution line will require the acquisition of five easements from private landowners along the route. Currently two of the five easements have been acquired and we expect to receive the remaining three easements prior to commencement of construction. If all service easements have not been acquired prior to completion of

construction, SMPA will retain the overhead distribution line until the easements are acquired and all services can be reconstructed underground. SMPA acquired a temporary easement from San Miguel County to complete the bore under the San Miguel River. The bore was successfully completed and the County indicated that they will issue a permanent easement covering the powerline crossing the county owned parcel. The Lawson Hill easement covered the bore location as well as the remainder of the power line located on their property.

USFS Special Use Permit

Copy included with AQUATIC RESOURCES

The Norwood Ranger District issued a Special Use Permit, Categorical Exclusion and Construction Stipulations on August 23, 2016. This authorization serves as a temporary construction permit. Upon completion of construction, the facilities covered by this authorization shall be included as an Amendment to the USFS Master Permit No. 4033-02 issued through the Uncompahgre National Forest to San Miguel Power Association on June 6, 1988. Copies of the Permit and Stipulations will be provided to the construction contractor.

Staging Areas

EXHIBIT "D"

It is expected that the sites depicted on the attached exhibit are possible locations that may be used for temporary staging areas. These staging areas will be used for construction operations and may include uses such as:

- Temporary office or storage trailer
- Employee muster before and after work
- Storage of construction equipment
- Conduit storage
- Conductor storage
- Storage of excavation spoils
- Storage of storm water control materials

The SMPA general contractor will be responsible for final staging area site acquisition. SMPA will specify that the general contractor will provide San Miguel County with final locations acquired for stockpile use.

Aquatic Resources

EXHIBIT "E"

A wetlands delineation survey was completed by Ecosphere Environmental Services Inc. (Ecosphere). The results of the survey are included in the Aquatic Resources Delineation Report (June 2016) prepared by Ecosphere. In addition Ecosphere has prepared submittals for the U.S. Army Corp of Engineers (USACE) to allow all construction associated with this project to fall under the auspices of the existing Nationwide Permit 12 and submittal for San Miguel County Wetlands permit. Enclosed please find copies of these submittals. Ecosphere will prepare a CDPHE Stormwater permit application, CDPHE groundwater dewatering permit application and SWMP Erosion Control Plan to be implemented and

maintained by the construction contractor. The construction contractor will be responsible for monitoring BMP's weekly and Ecosphere will be responsible for monitoring of the BMP's post construction.

Impacts to all features excluding Skunk Creek and the San Miguel River shall be limited by using construction methodology that will include trenching within the surface of Ilium Road or by trenching beneath existing culverts to avoid impact to a feature. The Skunk Creek Crossing will require the implementation of a diversion of the water within Skunk Creek and dewatering of the trench (see enclosed typical plans). Impacts to the San Miguel River have been avoided by the placement of a bore beneath the river. The bore is complete and 8" conduit has been placed for future pulling of electric conductor under the river.

Traffic Control Plan

EXHIBITS "F" and "G"

The construction contractor will be responsible for the implementation of traffic control. SMPA will provide the attached traffic control plans to potential bidders for implementation.

Road and Trail users will be provided notice of construction via Variable Message Boards, Temporary signing, Public service announcements via newspaper and radio and postings at each Galloping Goose trailhead. No construction activities will take place during festival or on weekends.

Proposed timeframe and method for handling traffic for construction activities (excavation and cable pulling) are depicted on the attached exhibit H.

Access to all private landowners will be maintained at all times during construction. Landowners will be informed prior to construction activities taking place at or near their driveways and will be notified of closures on Ilium Road.

The construction contractor will maintain steel plates to be used for emergency access needed by first responders and landowners. SMPA will notify the San Miguel Sheriffs office of planned construction activity schedule. Contact information for SMPA, contractor superintendent and traffic control supervisor will be provided to the Sheriff. Due to limited cellular coverage, it may be necessary for the onsite traffic control supervisor to use a radio for communication in emergency situations.

Construction Plan

EXHIBIT "H"

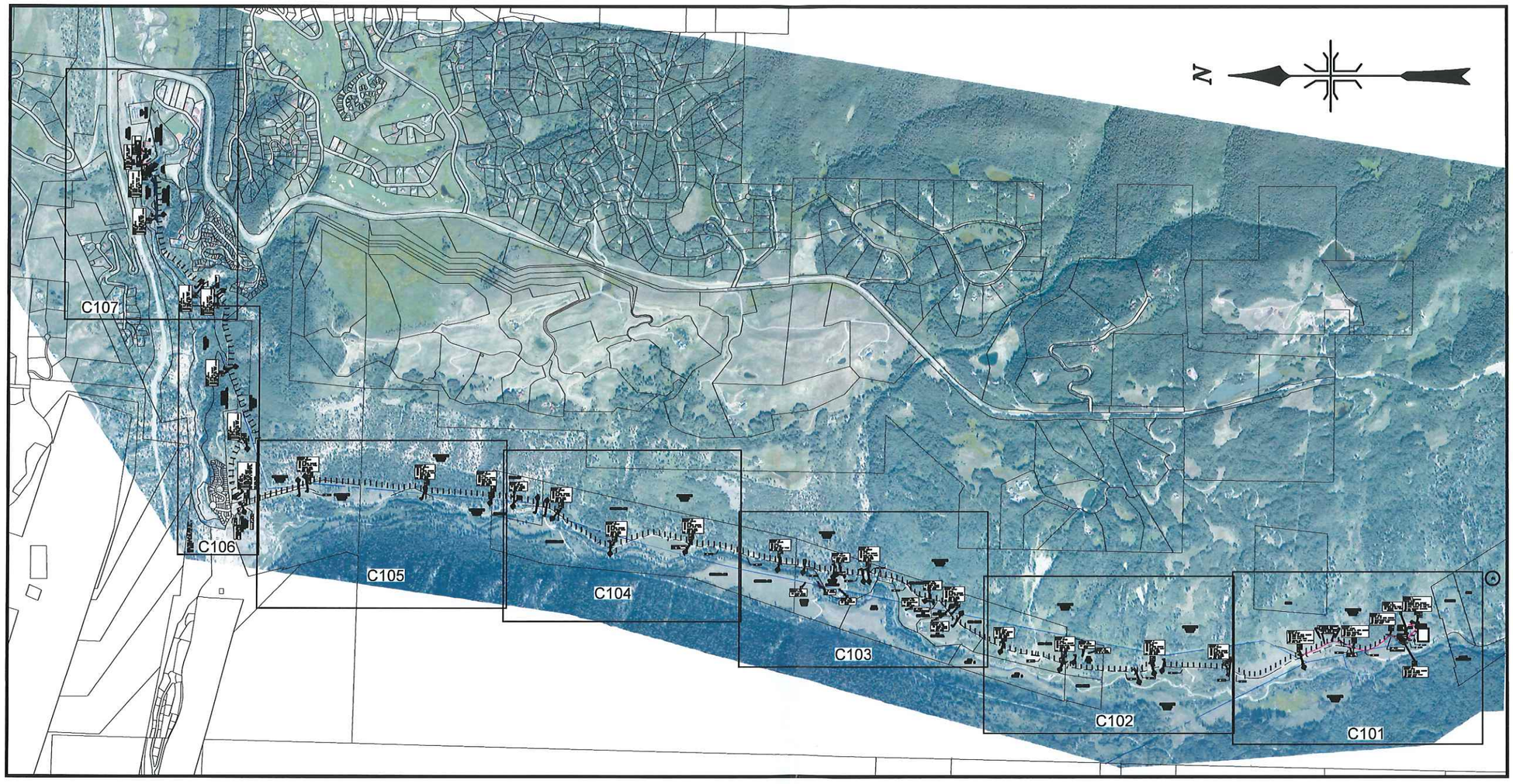

TELLURIDE / MOUNTAIN VILLAGE
RELIABILITY PROJECT
SAN MIGUEL POWER ASSOCIATION
COVER & PROJECT OVERVIEW

No.	Revisions	Date	By
A	ISSUE FOR AGENCY REVIEW	10-29-15	DHR
B	ISSUE FOR AGENCY REVIEW	02-29-16	DHR
C	ISSUE FOR BID	12-14-16	DHR

SAN MIGUEL POWER ASSOCIATION
T/MV RELIABILITY PROJECT
UNDERGROUND DISTRIBUTION LINE
COVER & PROJECT OVERVIEW

Exponential Engineering Company
202 W. North Street
Cortez, Colorado 81321
Phone: (970) 564-9261
Fax: (970) 564-1420

Drawn	NRB
Designed	WEM
Checked	DHR
Approved	DHR
Scale:	
11x17	NONE
22x34	NONE
Date	09-09-15
Proj. No.	SMPA-1401
Reference	

Sheet No.
COVER

DRAWING INDEX

DWG #	TITLE	REV	NOTES
COVER	COVER & PROJECT OVERVIEW	C	
C100	LEGEND & DRAWING INDEX	C	
C101	PLAN - STATIONS 0+00 TO 36+50	C	
C102	PLAN - STATIONS 36+50 TO 81+00	C	
C103	PLAN - STATIONS 81+00 TO 129+50	C	
C104	PLAN - STATIONS 129+50 TO 174+50	C	
C105	PLAN - STATIONS 174+50 TO 218+00	C	
C106	PLAN - STATIONS 218+00 TO 257+00	C	
C107	PLAN - STATIONS 257+00 TO 301+24	C	
C108	PLAN - SUNSHINE SUBSTATION AREA	C	
C109	PLAN - TELLURIDE SUBSTATION AREA	C	
D100	LOCATIONS 3-8 DETAILS	C	
D101	LOCATIONS 9-12 DETAILS	C	
D102	LOCATIONS 13-18 DETAILS	C	
D103	LOCATIONS 19-23 DETAILS	C	
D104	LOCATIONS 24-25 DETAILS	C	
D105	DUCT BANK CROSS SECTIONS	C	
D106	DUCT BANK DETAILS	C	
D107	SECTIONALIZING CABINET DETAILS	C	
D108	FIBER OPTIC VAULT DETAILS	C	
D109	ELECTRIC VAULT DETAILS	D	
D110	ELECTRIC VAULT DETAILS	C	
22	Total Drawings in Package		

LEGEND

- TRENCH CROSS SECTION
- SC — SECTIONALIZING CABINET WIDE BASE FOR EXPRESS FEEDERS
- SC F — EXISTING SECTIONALIZING CABINET
- SC DVE — EXISTING SECTIONALIZING CABINET DOWN VALLEY
- SC DV — SECTIONALIZING CABINET DOWN VALLEY
- SC 1 — SECTIONALIZING CABINET SINGLE PHASE
- S F — EXISTING PAD MOUNTED SWITCH
- S — PAD MOUNTED SWITCH
- V — VAULT
- V DV — VAULT DOWN VALLEY
- FV — FIBER VAULT
- TV — SINGLE PHASE TRANSFORMER VAULT
- R — PAD MOUNTED REACTOR
- TW — TRACER WIRE TEST STATION
- OVERHEAD TRANSMISSION LINE
- OVERHEAD DISTRIBUTION LINE
- EXISTING UNDERGROUND DUCT BANK DISTRIBUTION LINE
- e — EXISTING UNDERGROUND DUCT BANK DISTRIBUTION LINE NOT INVOLVED IN THIS PROJECT
- NEW UNDERGROUND DUCT BANK DISTRIBUTION LINE
- t — EXISTING TELEPHONE
- stm — EXISTING UNDERGROUND STORM PIPE
- EXISTING STORM DRAINS
- g — EXISTING GAS PIPE
- ss — EXISTING SEWER PIPE
- PROPERTY LINES
- WETLANDS DELINIATION
- CULTURAL SITE

No.	Revisions	Date	By
A	ISSUE FOR AGENCY REVIEW	10-29-15	DHR
B	ISSUE FOR AGENCY REVIEW	02-29-16	DHR
C	ISSUE FOR BID	12-14-16	DHR

SAN MIGUEL POWER ASSOCIATION
T/MV RELIABILITY PROJECT
UNDERGROUND DISTRIBUTION LINE
LEGEND & DRAWING INDEX

Exponential Engineering Company
202 W. North Street
Cortez, Colorado 81321
Phone: (970) 564-9261
Fax: (970) 564-1420

Drawn NRB
Designed WEM
Checked DHR
Approved DHR
Scale:
11x17 NONE
22x34 NONE
Date 09-09-15
Proj. No. SMPA-1401
Reference

Sheet No.
C100

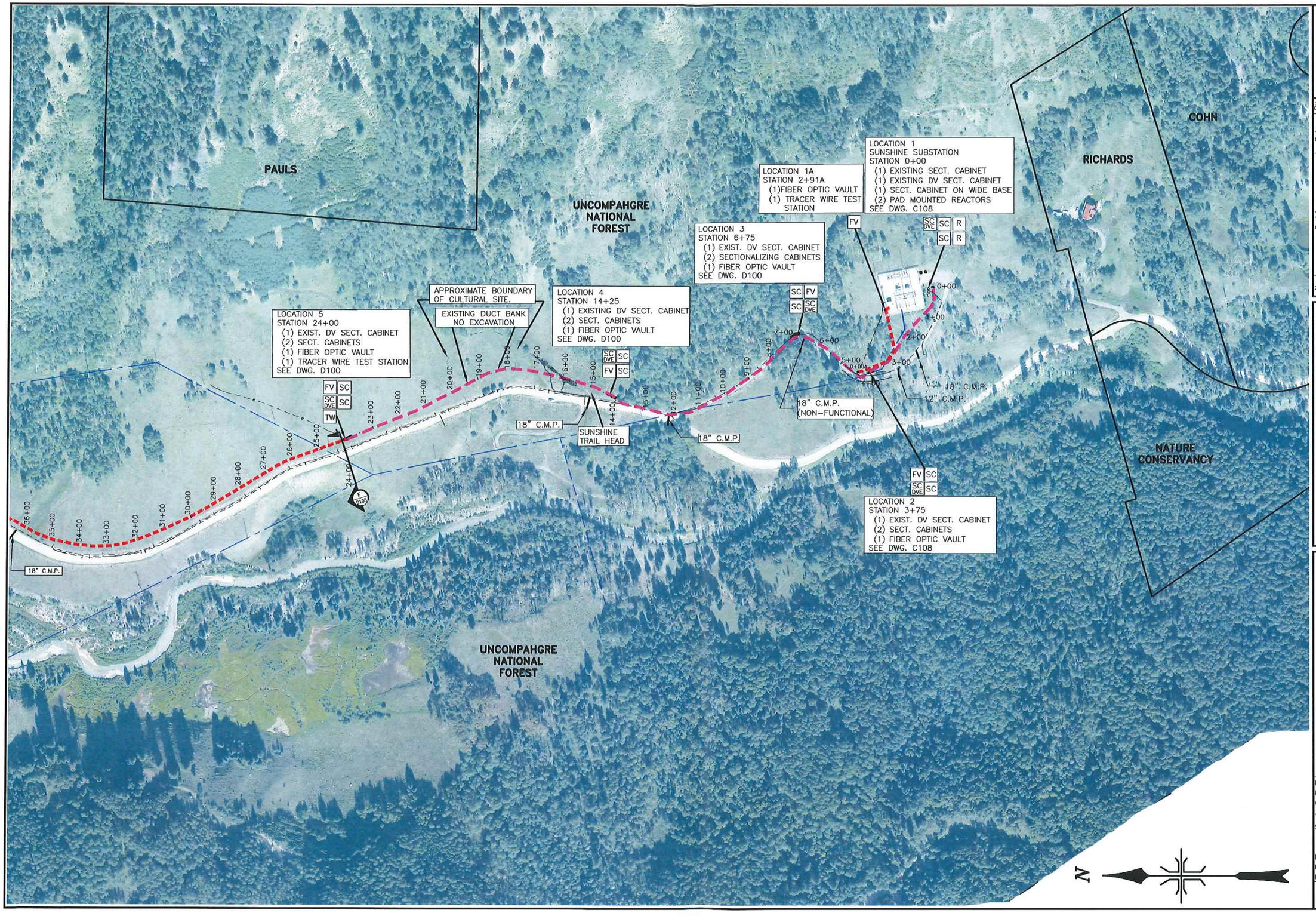

No.	Revisions	Date	By
A	ISSUE FOR AGENCY REVIEW	11-12-15	DHR
B	ISSUE FOR AGENCY REVIEW	02-29-16	DHR
C	ISSUE FOR BID	12-14-16	DHR

SAN MIGUEL POWER ASSOCIATION
T/MV RELIABILITY PROJECT

UNDERGROUND DISTRIBUTION LINE
PLAN-STATION 0+00 TO 36+50

Exponential Engineering Company
202 W. North Street
Cortez, Colorado 81321
Phone: (970) 564-9261
Fax: (970) 564-1420

Drawn	NRB
Designed	WEM
Checked	DHR
Approved	DHR
Scale:	
11x17	1"=300'-0"
22x34	1"=150'-0"
Date	09-09-15
Proj. No.	SMPA-1401
Reference	

Sheet No.
C101

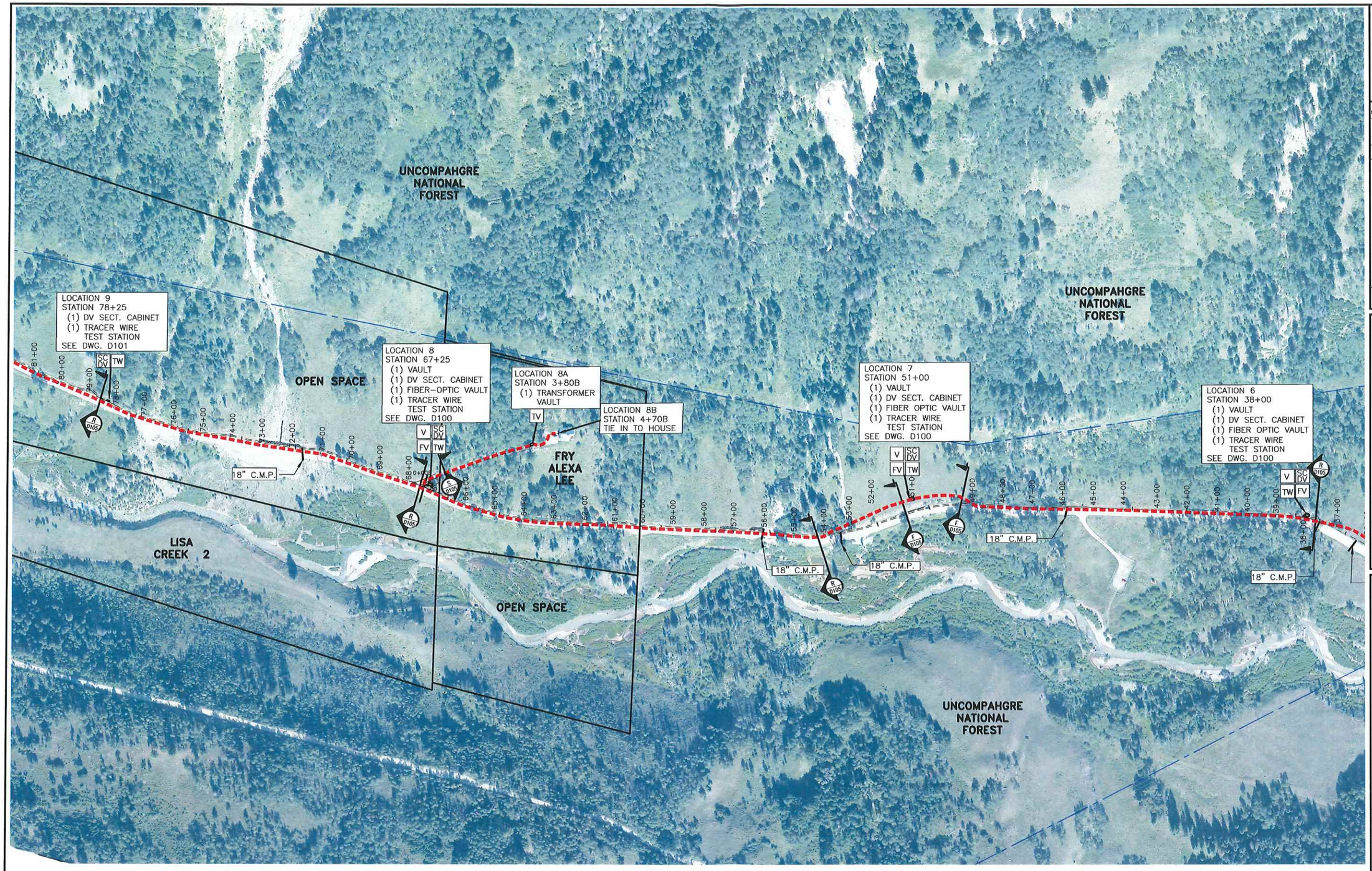

No.	Revisions	Date	By
A	ISSUE FOR AGENCY REVIEW	11-12-15	DHR
B	ISSUE FOR AGENCY REVIEW	02-29-16	DHR
C	ISSUE FOR BID	12-14-16	DHR

SAN MIGUEL POWER ASSOCIATION
T/MV RELIABILITY PROJECT

UNDERGROUND DISTRIBUTION LINE
PLAN-STATION 36+50 TO 81+00

Exponential Engineering Company
202 W. North Street
Cortez, Colorado 81321
Phone: (970) 564-9261
Fax: (970) 564-1420

Drawn	NRB
Designed	WEM
Checked	DHR
Approved	DHR
Scale:	
11x17	1"=300'-0"
22x34	1"=150'-0'
Date	09-09-15
Proj. No.	SMPA-1401
Reference	

Sheet No.
C102

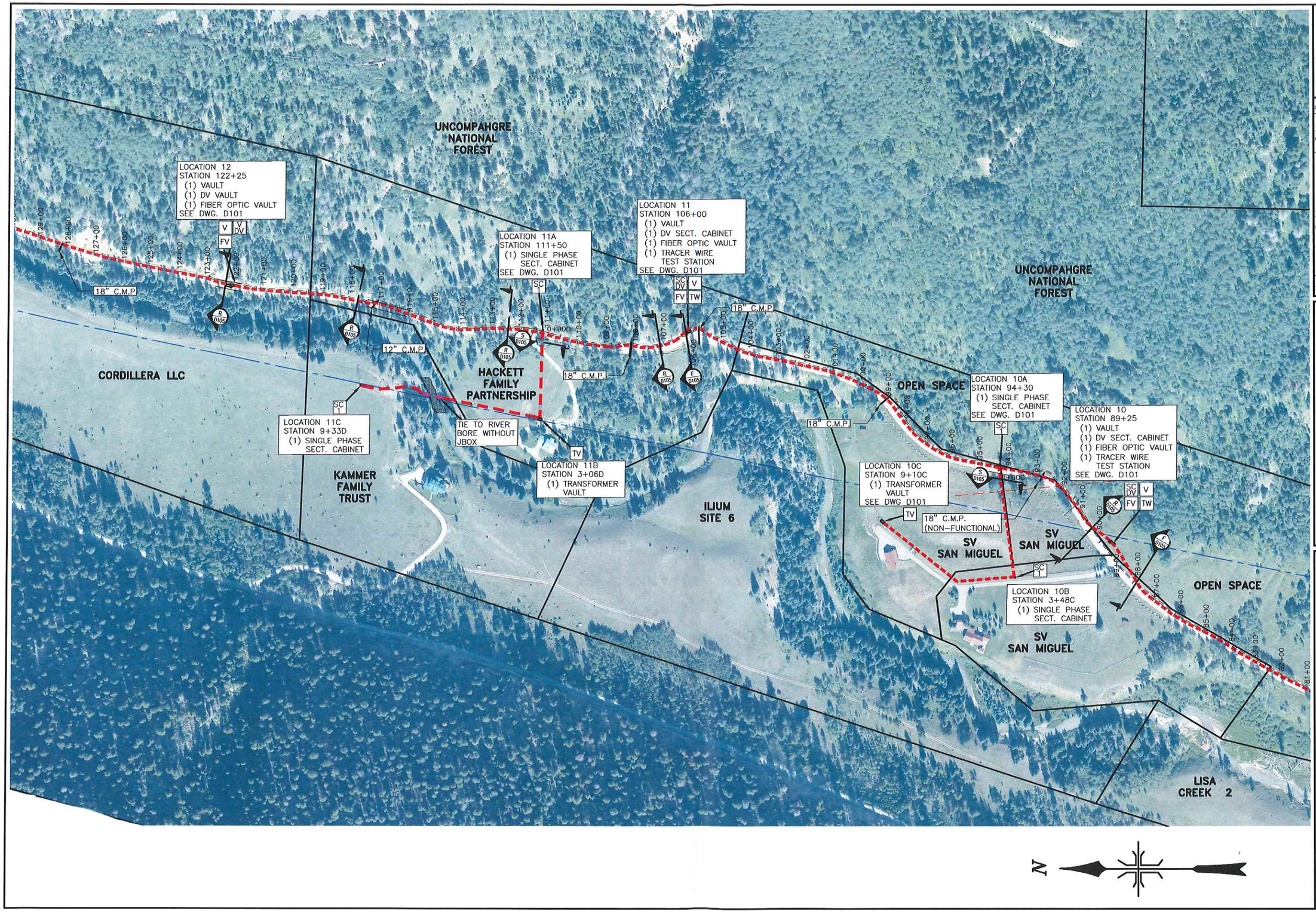

No.	Revisions	Date	By
A	ISSUE FOR AGENCY REVIEW	10-29-15	DHR
B	ISSUE FOR AGENCY REVIEW	02-29-16	DHR
C	ISSUE FOR BID	12-14-16	DHR

SAN MIGUEL POWER ASSOCIATION
T/MV RELIABILITY PROJECT

UNDERGROUND DISTRIBUTION LINE
PLAN-STATION 81+00 TO 129+50

Exponential Engineering Company
202 W. North Street
Cortez, Colorado 81321
Phone: (970) 564-9261
Fax: (970) 564-1420

Drawn	NRB
Designed	WEM
Checked	DHR
Approved	DHR
Scale:	
11x17	1"=300'-0"
22x34	1"=150'-0"
Date	09-09-15
Proj. No.	SMPA-1401
Reference	

Sheet No.
C103

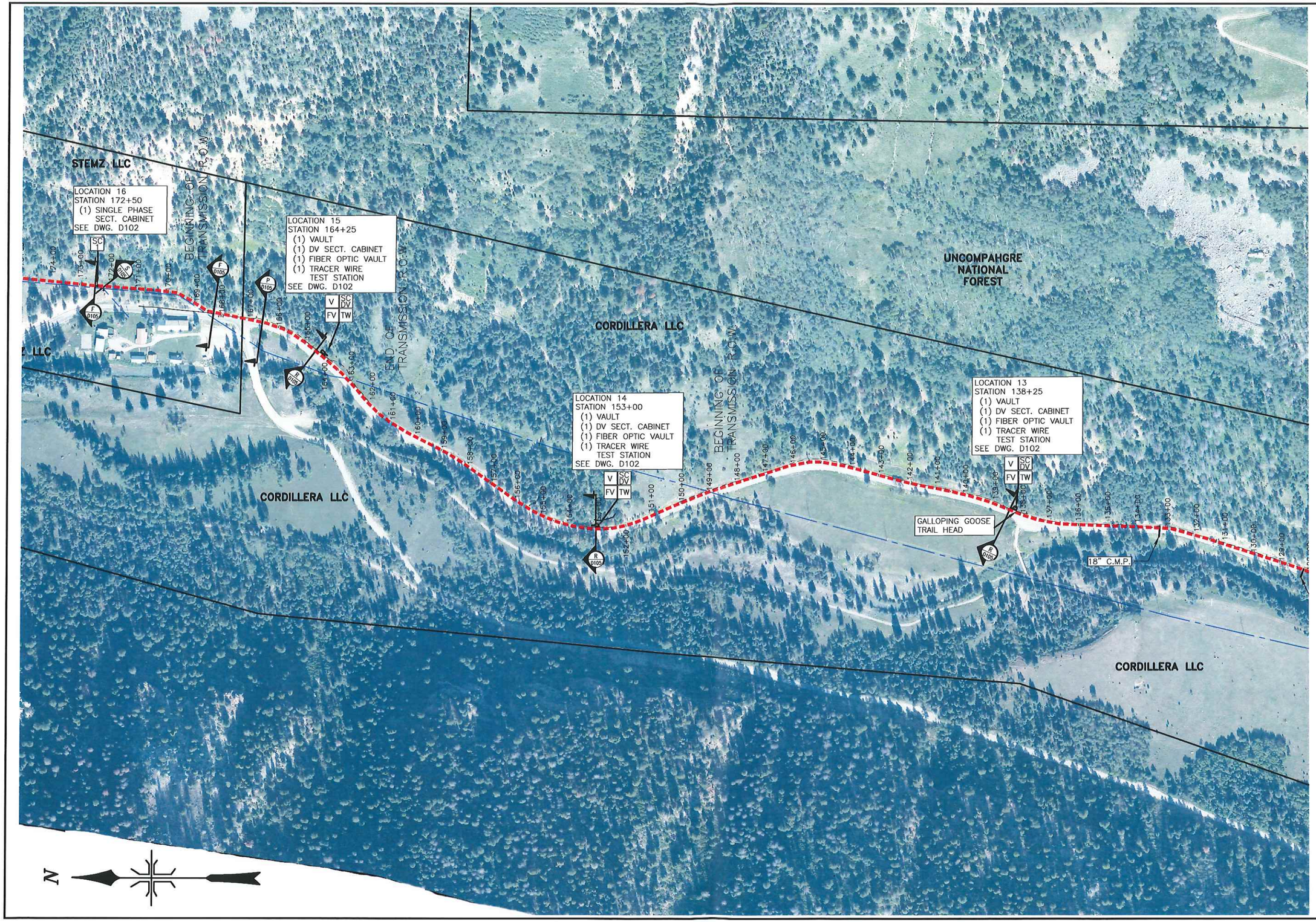

No.	Revisions	Date	By
A	ISSUE FOR AGENCY REVIEW	10-29-15	DHR
B	ISSUE FOR AGENCY REVIEW	02-29-16	DHR
C	ISSUE FOR BID	12-14-16	DHR

SAN MIGUEL POWER ASSOCIATION
T/MV RELIABILITY PROJECT

UNDERGROUND DISTRIBUTION LINE
PLAN-STATION 129+50 TO 174+50

Exponential Engineering Company
202 W. North Street
Cortez, Colorado 81321
Phone: (970) 564-9261
Fax: (970) 564-1420

Drawn	NRB
Designed	WEM
Checked	DHR
Approved	DHR
Scale:	
11x17	1"=300'-0"
22x34	1"=150'-0"
Date	09-09-15
Proj. No.	SMPA-1401
Reference	

Sheet No.
C104

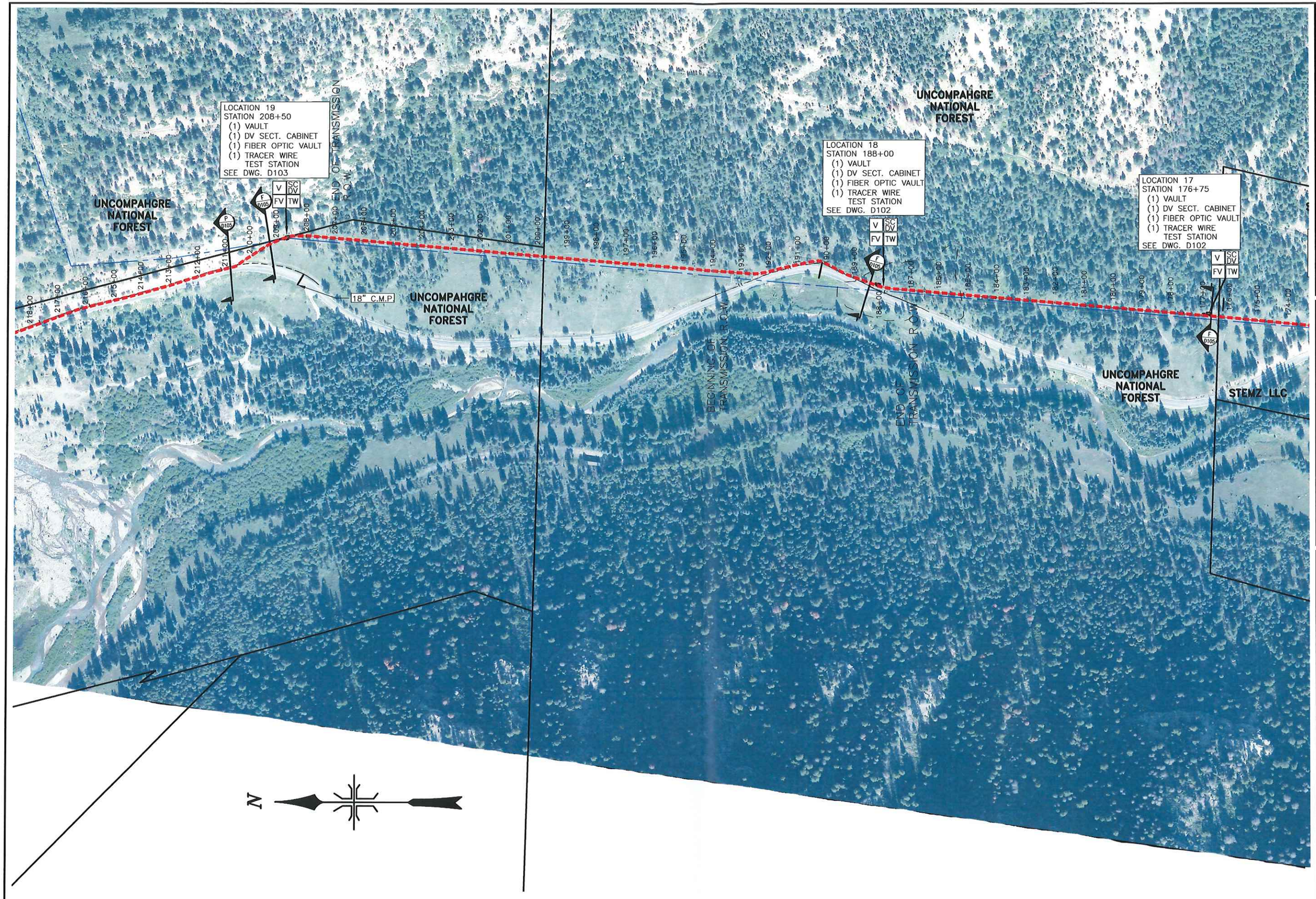

No.	Revisions	Date	By
A	ISSUE FOR AGENCY REVIEW	10-29-15	DHR
B	ISSUE FOR AGENCY REVIEW	02-29-16	DHR
C	ISSUE FOR BID	12-14-16	DHR

SAN MIGUEL POWER ASSOCIATION
T/MV RELIABILITY PROJECT

UNDERGROUND DISTRIBUTION LINE
PLAN-STATION 174+50 TO 218+00

Exponential Engineering Company
202 W. North Street
Cortez, Colorado 81321
Phone: (970) 564-9261
Fax: (970) 564-1420

Drawn	NRB
Designed	WEM
Checked	DHR
Approved	DHR
Scale:	
11x17	1"=300'-0"
22x34	1"=150'-0"
Date	09-09-15
Proj. No.	SMPA-1401
Reference	

Sheet No.
C105

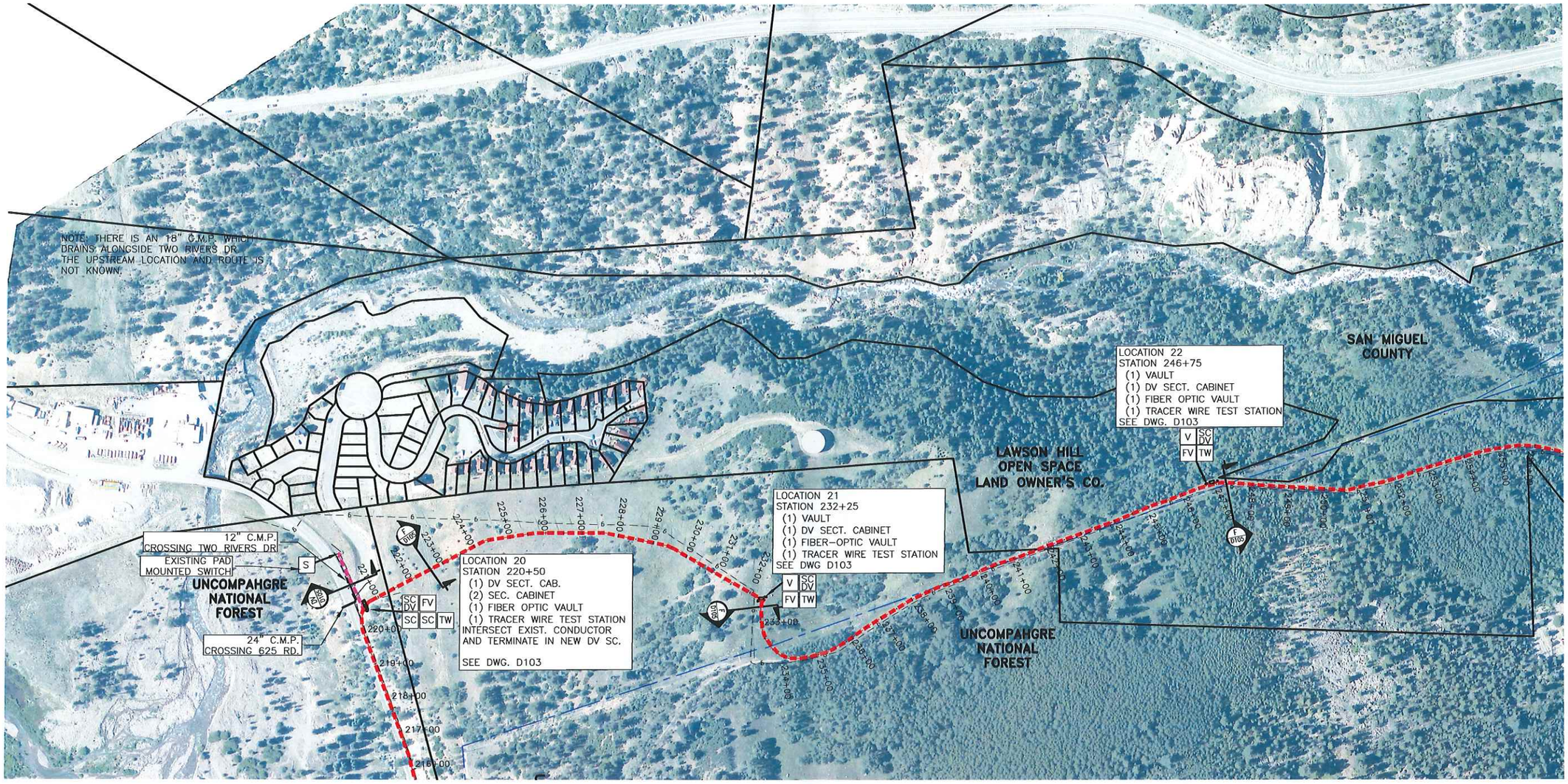

No.	Revisions	Date	By
A	ISSUE FOR AGENCY REVIEW	10-29-15	DHR
B	ISSUE FOR AGENCY REVIEW	02-29-16	DHR
C	ISSUE FOR BID	12-14-16	DHR

SAN MIGUEL POWER ASSOCIATION
T/MV RELIABILITY PROJECT

UNDERGROUND DISTRIBUTION LINE
STATION 218+00 TO 257+00

Exponential Engineering Company
202 W. North Street
Cortez, Colorado 81321
Phone: (970) 564-9261
Fax: (970) 564-1420

Drawn	NRB
Designed	WEM
Checked	DHR
Approved	DHR
Scale:	
11x17	1"=300'-0"
22x34	1"=150'-0"
Date	09-09-15
Proj. No.	SMPA-1401
Reference	

Sheet No.
C106

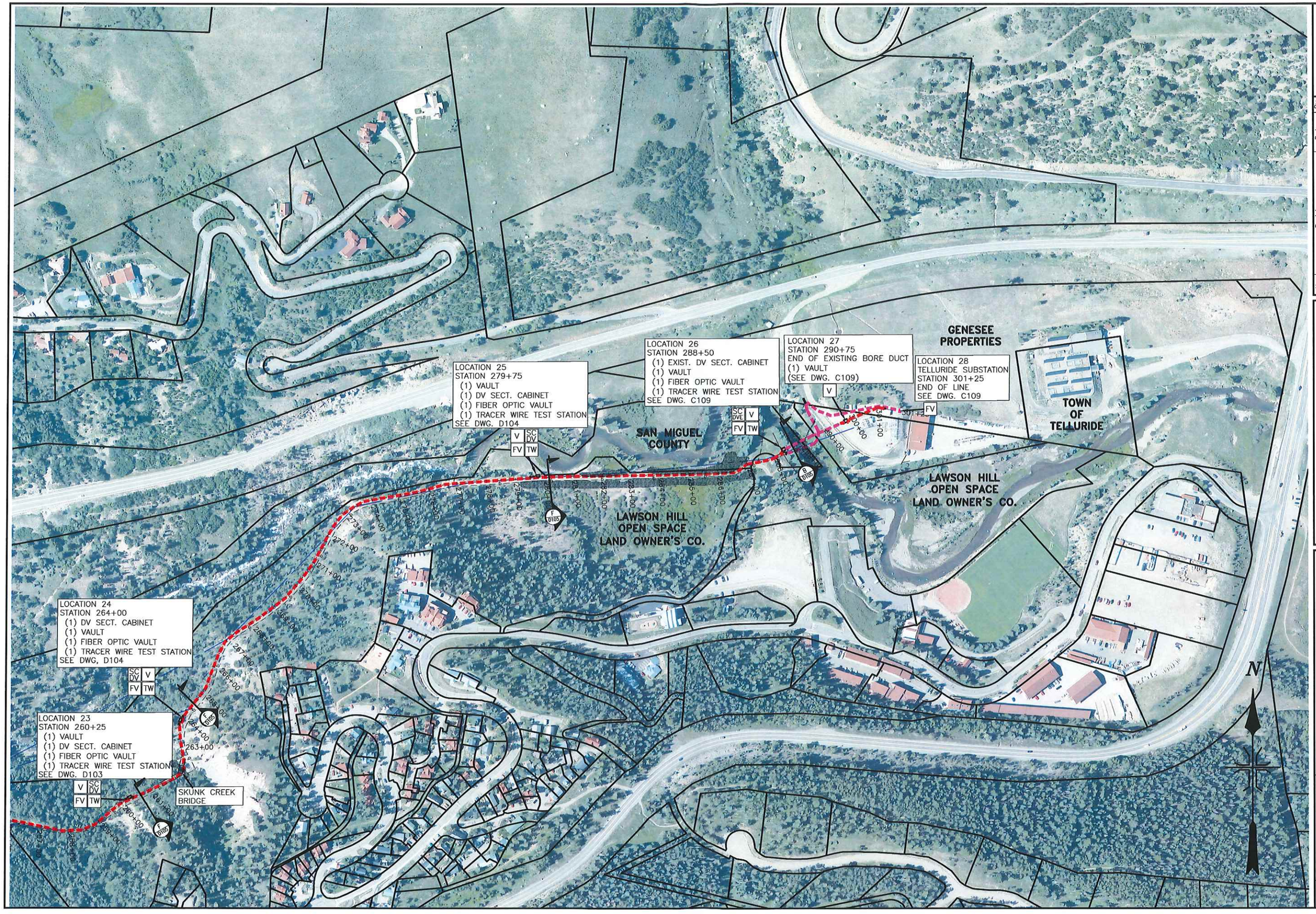

No.	Revisions	Date	By
A	ISSUE FOR AGENCY REVIEW	11-12-15	DHR
B	ISSUE FOR AGENCY REVIEW	02-29-16	DHR
C	ISSUE FOR BID	12-14-16	DHR

SAN MIGUEL POWER ASSOCIATION
T/MV RELIABILITY PROJECT

UNDERGROUND DISTRIBUTION LINE
STATION 257+00 TO 301+24

Exponential Engineering Company
202 W. North Street
Cortez, Colorado 81321
Phone: (970) 564-9261
Fax: (970) 564-1420

Drawn	NRB
Designed	WEM
Checked	DHR
Approved	DHR
Scale:	
11x17	1"=300'-0"
22x34	1"=150'-0"
Date	09-09-15
Proj. No.	SMPA-1401
Reference	

Sheet No.
C107

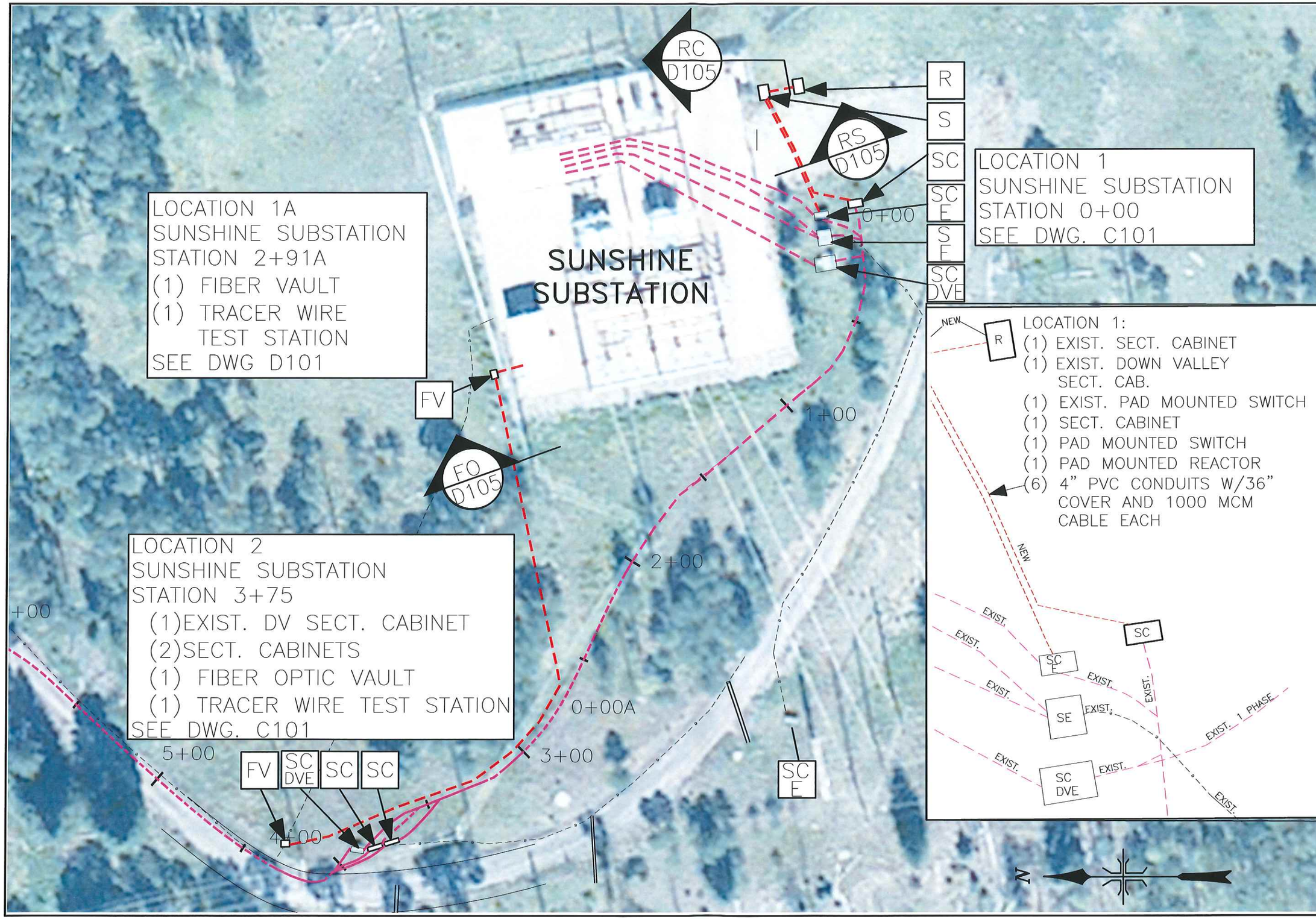

No	Revisions	Date	By
A	ISSUE FOR AGENCY REVIEW	11-12-15	DHR
B	ISSUE FOR AGENCY REVIEW	02-29-16	DHR
C	ISSUE FOR BID	12-14-16	DHR

SAN MIGUEL POWER ASSOCIATION
T/MV RELIABILITY PROJECT

UNDERGROUND DISTRIBUTION LINE
SUNSHINE SUBSTATION

Exponential Engineering Company
202 W. North Street
Cortez, Colorado 81321
Phone: (970) 564-9261
Fax: (970) 564-1420

Drawn	NRB
Designed	WEM
Checked	DHR
Approved	DHR
Scale:	
11x17	1"=40'-0"
22x34	1"=20'-0"
Date	09-09-15
Proj. No.	SMPA-1401
Reference	

Sheet No.
C108

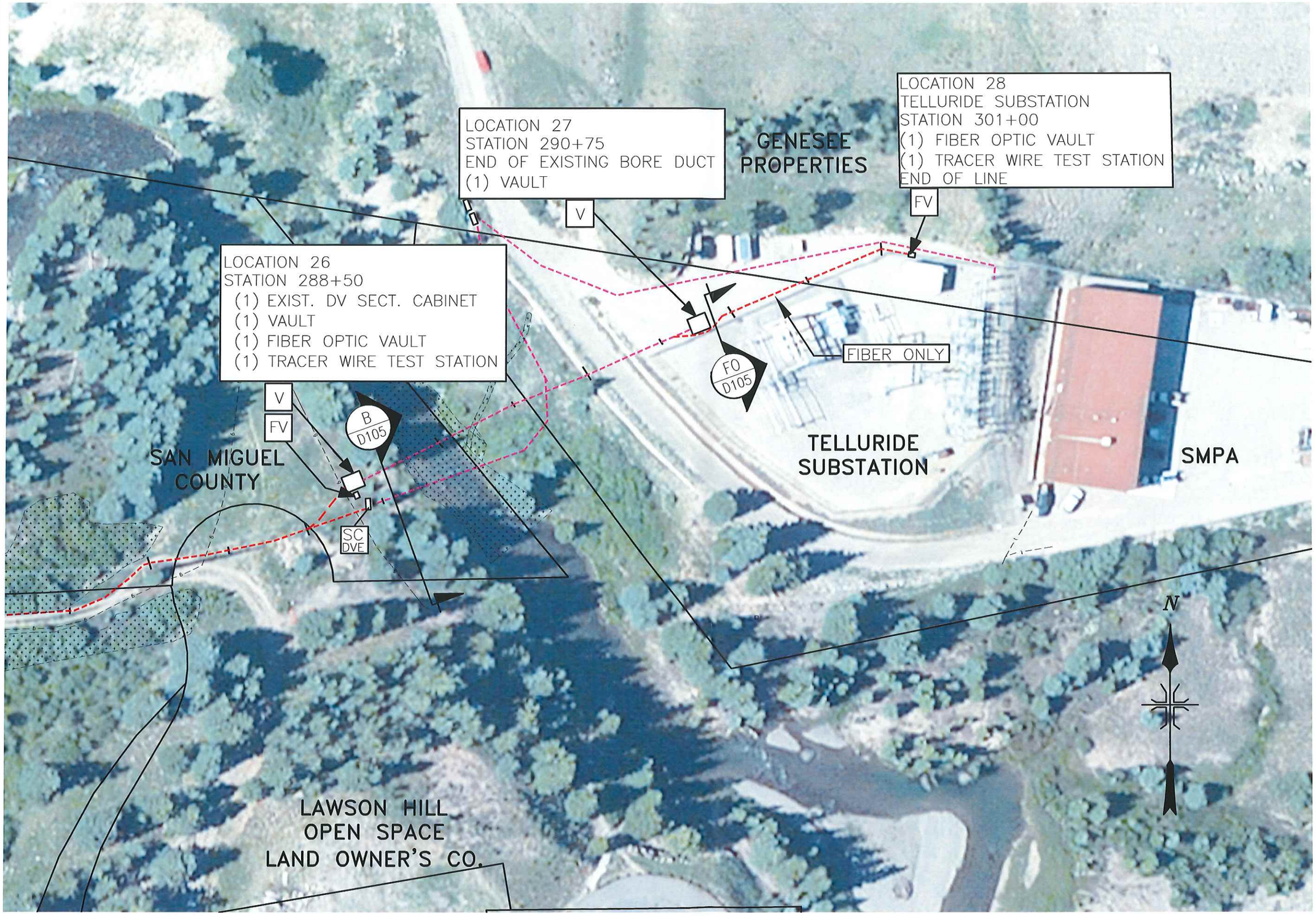

No.	Revisions	Date	By
A	ISSUE FOR AGENCY REVIEW	11-12-15	DHR
B	ISSUE FOR AGENCY REVIEW	02-29-16	DHR
C	ISSUE FOR BID	12-14-16	DHR

SAN MIGUEL POWER ASSOCIATION
T/MV RELIABILITY PROJECT

UNDERGROUND DISTRIBUTION LINE
TELLURIDE SUBSTATION

Exponential Engineering Company
202 W. North Street
Cortez, Colorado 81321
Phone: (970) 564-9261
Fax: (970) 564-1420

Drawn	NRB
Designed	WEM
Checked	DHR
Approved	DHR
Scale:	
11x17	1"=40'-0"
22x34	1"=20'-0"
Date	09-09-15
Proj. No.	SMPA-1401
Reference	

Sheet No.
C109

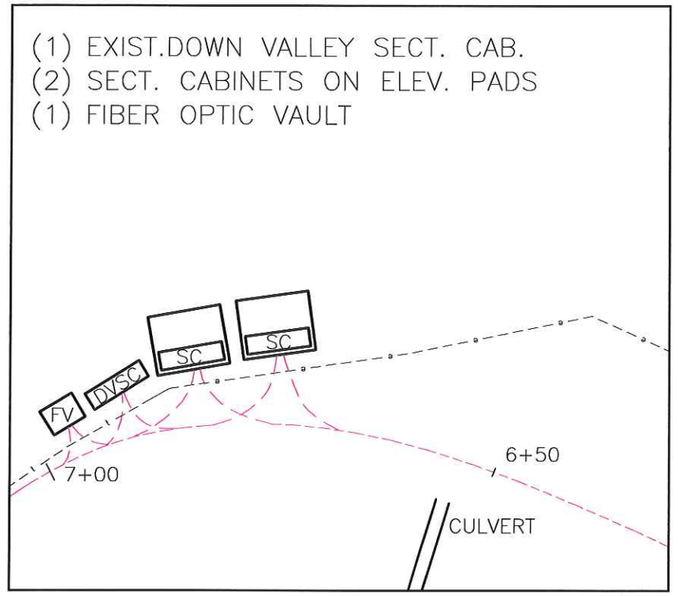

LOCATION 3
STATION 6+75
SEE DWG. C101

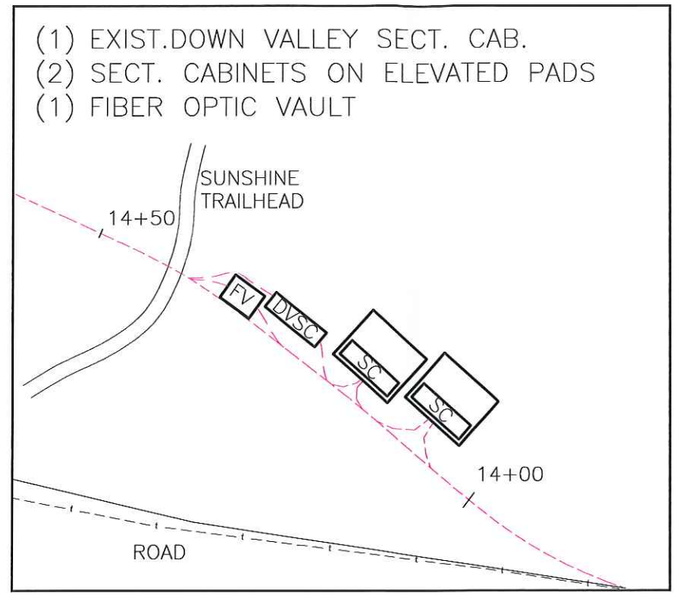

LOCATION 4
STATION 14+25
SEE DWG. C101

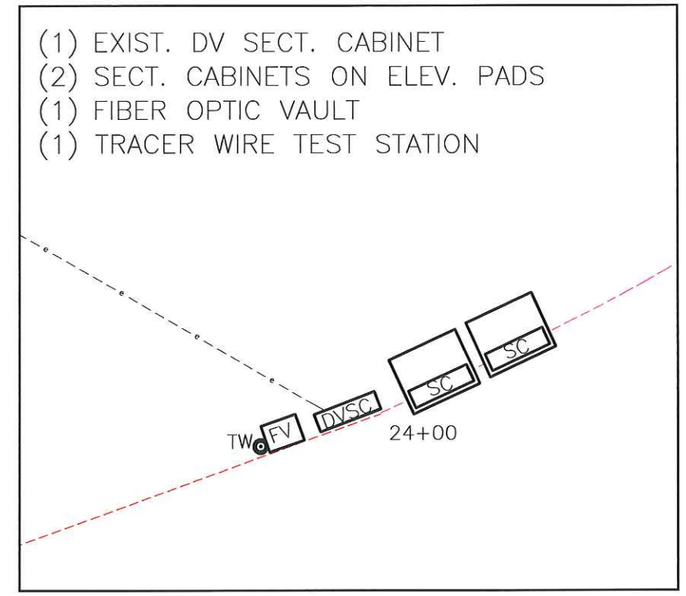

LOCATION 5
STATION 24+00
SEE DWG. C101

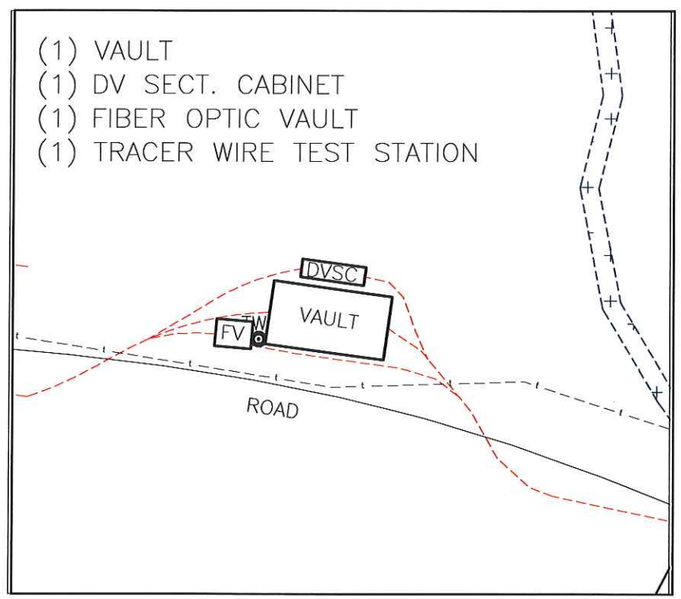

LOCATION 6
STATION 38+00
SEE DWG. C102

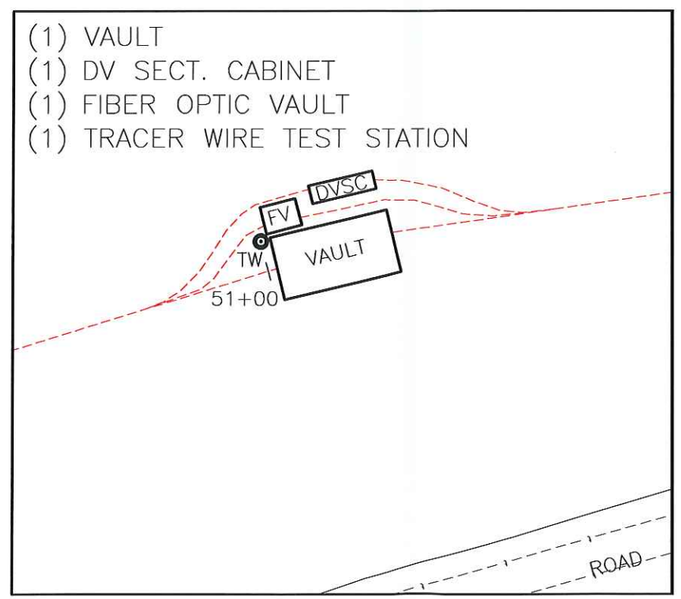

LOCATION 7
STATION 51+00
SEE DWG. C102

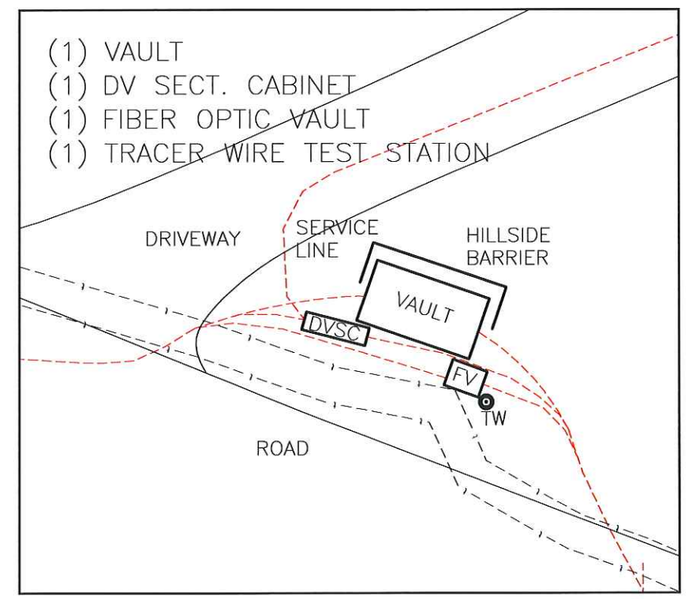

LOCATION 8
STATION 67+25
SEE DWG. C102

No	Revisions	Date	By
A	ISSUE FOR AGENCY REVIEW	10-29-15	DHR
B	ISSUE FOR AGENCY REVIEW	02-29-16	DHR
C	ISSUE FOR BID	12-14-16	DHR

SAN MIGUEL POWER ASSOCIATION
T/MV RELIABILITY PROJECT
UNDERGROUND DISTRIBUTION LINE
LOCATIONS 3-8

Exponential Engineering Company
202 W. North Street
Cortez, Colorado 81321
Phone: (970) 564-9261
Fax: (970) 564-1420

Drawn	NRB
Designed	WEM
Checked	DHR
Approved	DHR
Scale:	
11x17	NONE
22x34	NONE
Date	09-27-15
Proj. No.	SMPA-1401
Reference	

Sheet No.
D100

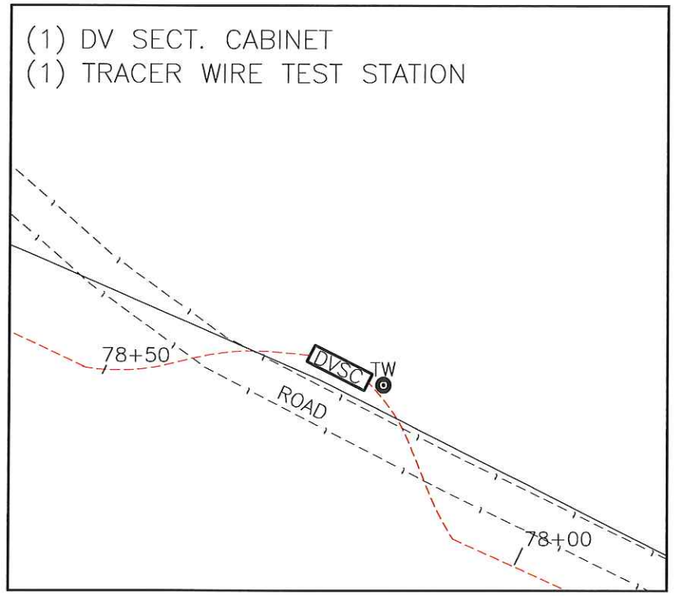

LOCATION 9
STATION 78+25
SEE DWG. C102

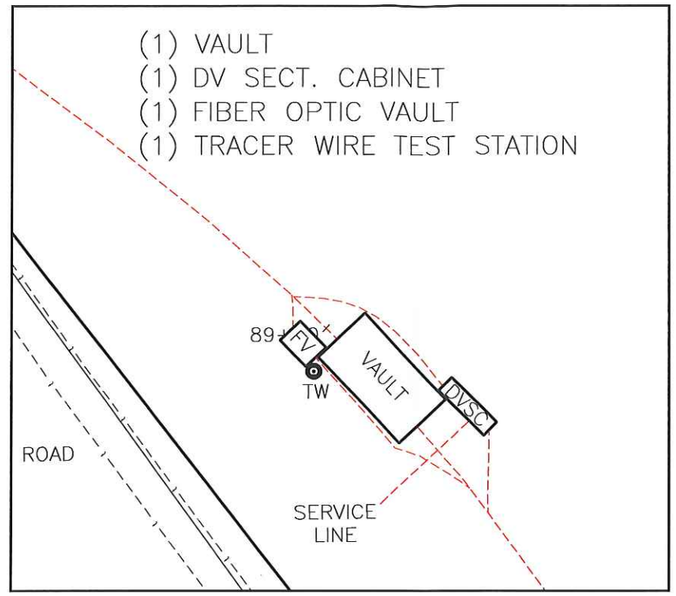

LOCATION 10
STATION 89+25
SEE DWG. C103

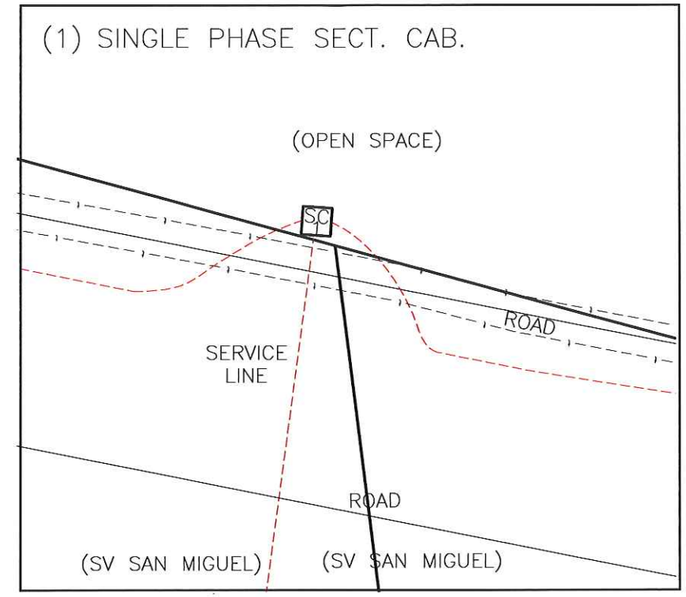

LOCATION 10A
STATION 94+30
SEE DWG. C103

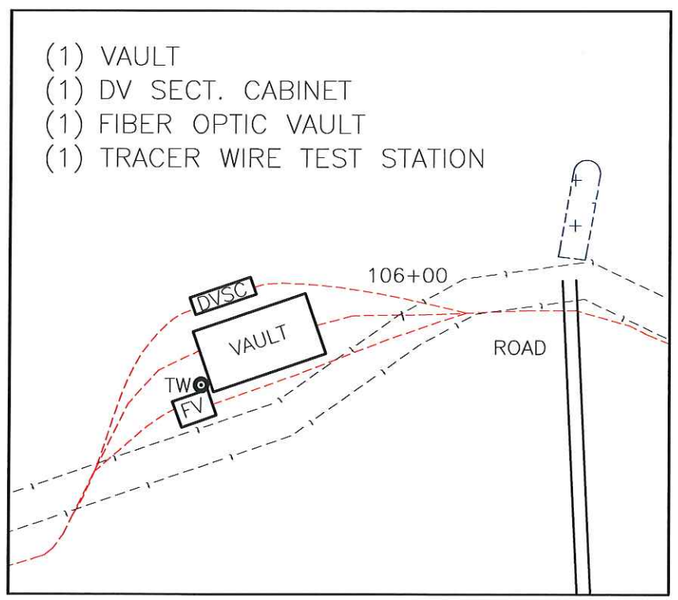

LOCATION 11
STATION 106+00
SEE DWG. C103

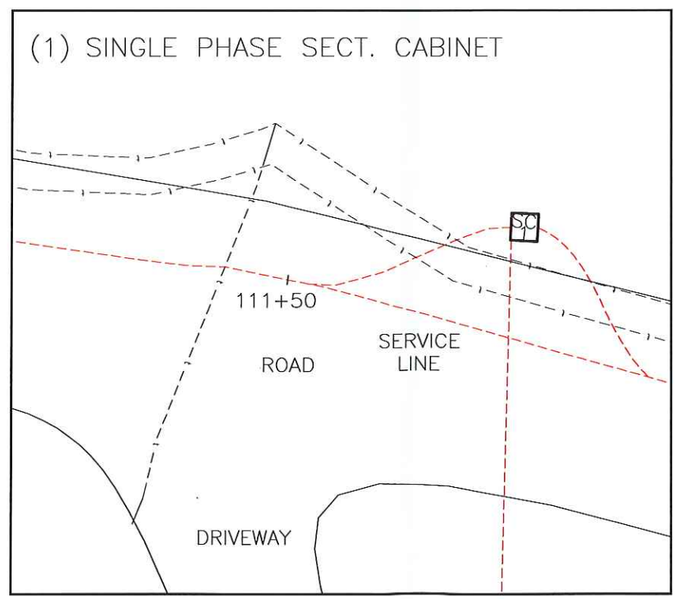

LOCATION 11A
STATION 111+50
SEE DWG. C103

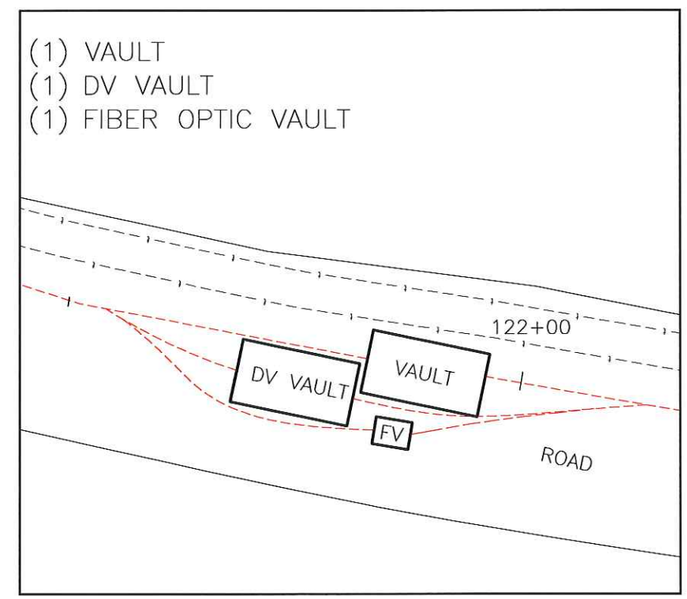

LOCATION 12
STATION 122+25
SEE DWG. C103

No	Revisions	Date	By
A	ISSUE FOR AGENCY REVIEW	10-29-15	DHR
B	ISSUE FOR AGENCY REVIEW	02-29-16	DHR
C	ISSUE FOR BID	12-14-16	DHR

SAN MIGUEL POWER ASSOCIATION
T/MV RELIABILITY PROJECT
UNDERGROUND DISTRIBUTION LINE
LOCATIONS 9-12

Exponential Engineering Company
202 W. North Street
Cortez, Colorado 81321
Phone: (970) 564-9261
Fax: (970) 564-1420

Drawn	NRB
Designed	WEM
Checked	DHR
Approved	DHR
Scale:	
11x17	NONE
22x34	NONE
Date	10-27-15
Proj. No.	SMPA-1401
Reference	

Sheet No.
D101

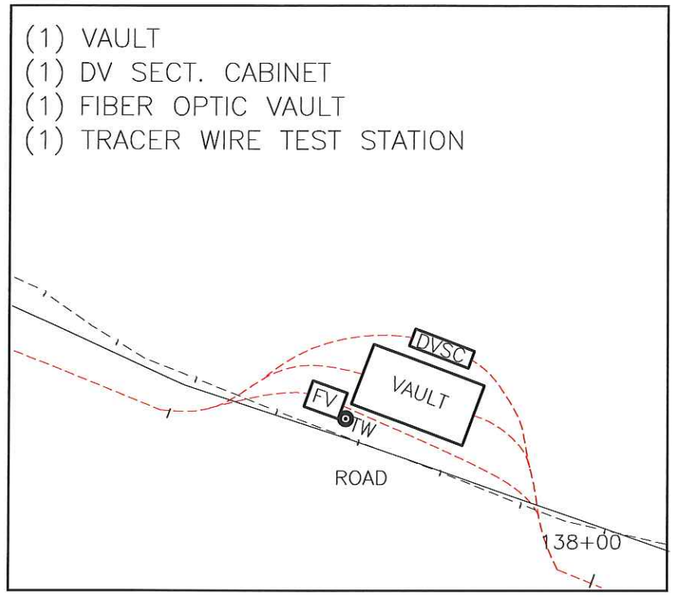

LOCATION 13
STATION 138+25
SEE DWG. C104

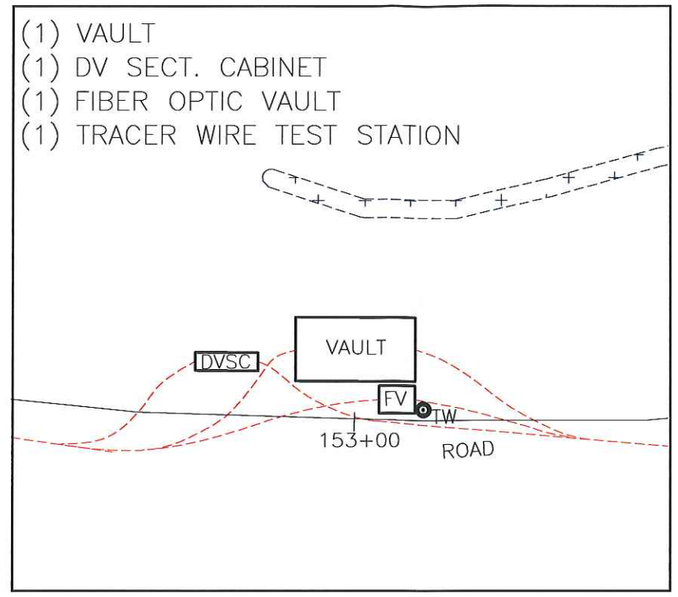

LOCATION 14
STATION 153+00
SEE DWG. C104

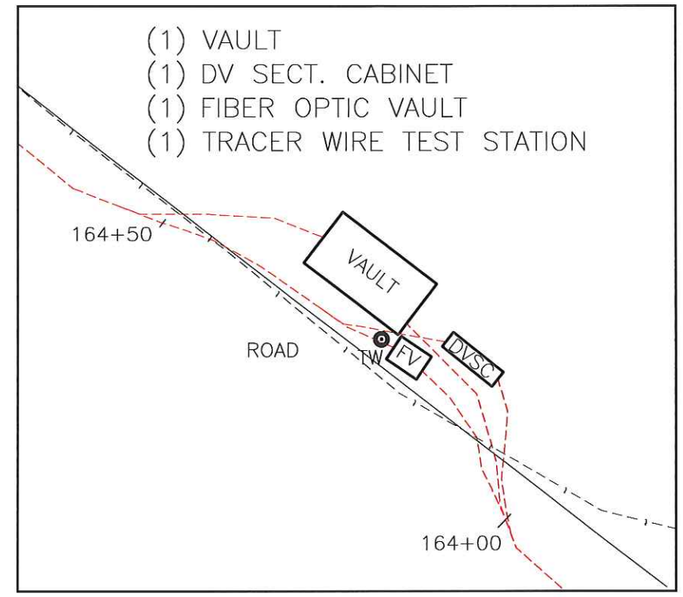

LOCATION 15
STATION 164+25
SEE DWG. C104

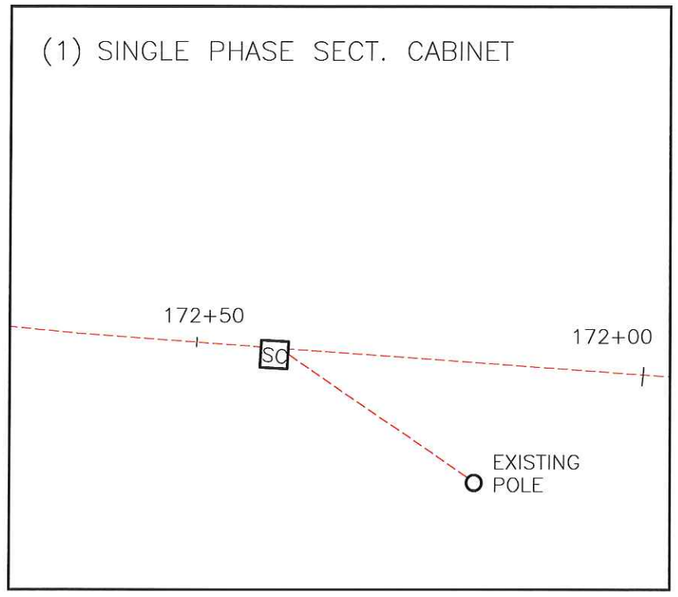

LOCATION 16
STATION 172+50
SEE DWG. C104

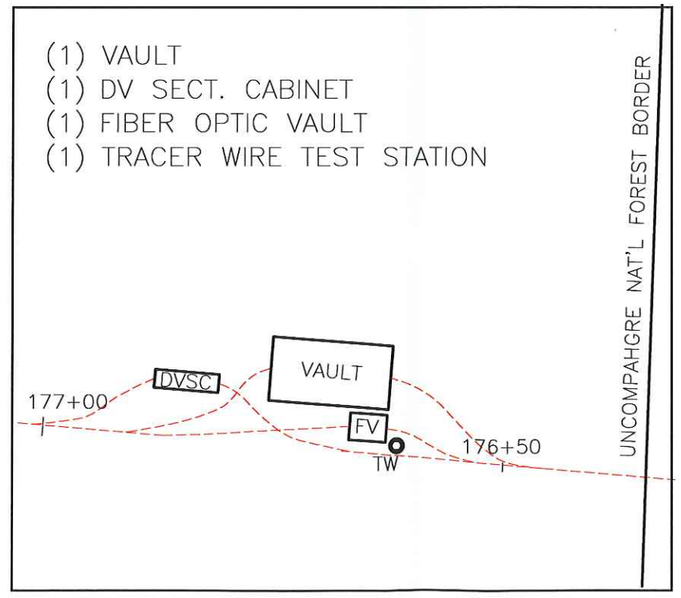

LOCATION 17
STATION 176+75
SEE DWG. C105

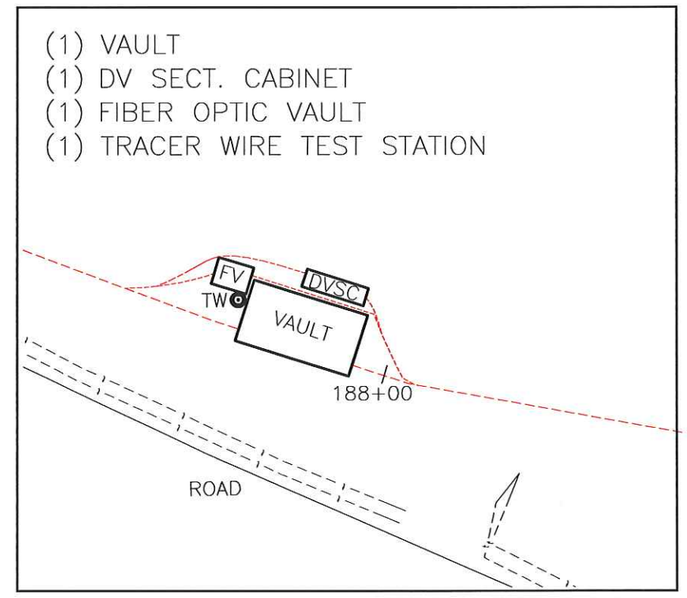

LOCATION 18
STATION 188+00
SEE DWG. C105

No.	Revisions	Date	By
A	ISSUE FOR AGENCY REVIEW	10-29-15	DHR
B	ISSUE FOR AGENCY REVIEW	02-29-16	DHR
C	ISSUE FOR BID	12-14-16	DHR

SAN MIGUEL POWER ASSOCIATION
T/MV RELIABILITY PROJECT
UNDERGROUND DISTRIBUTION LINE
LOCATIONS 13-18

Exponential Engineering Company
202 W. North Street
Cortez, Colorado 81321
Phone: (970) 564-9261
Fax: (970) 564-1420

Drawn	NRB
Designed	WEM
Checked	DHR
Approved	DHR
Scale:	
11x17	NONE
22x34	NONE
Date	09-27-15
Proj. No.	SMPA-1401
Reference	

Sheet No.
D102

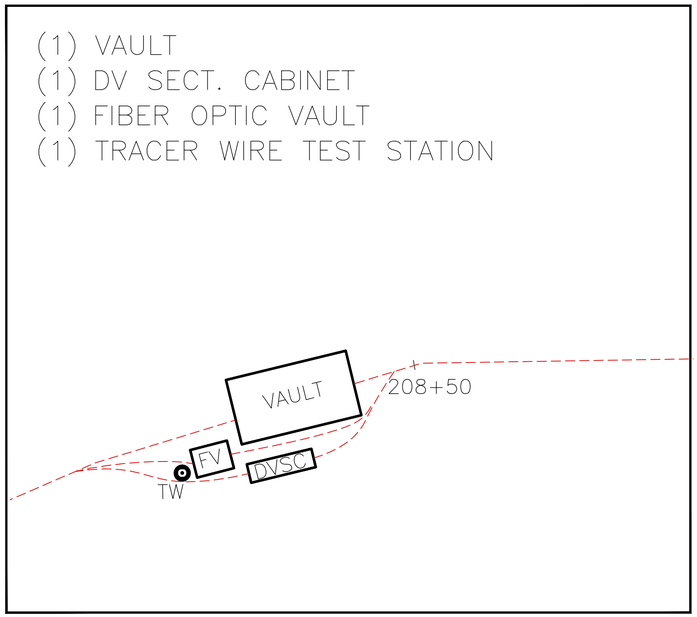

LOCATION 19
STATION 208+50
SEE DWG C105

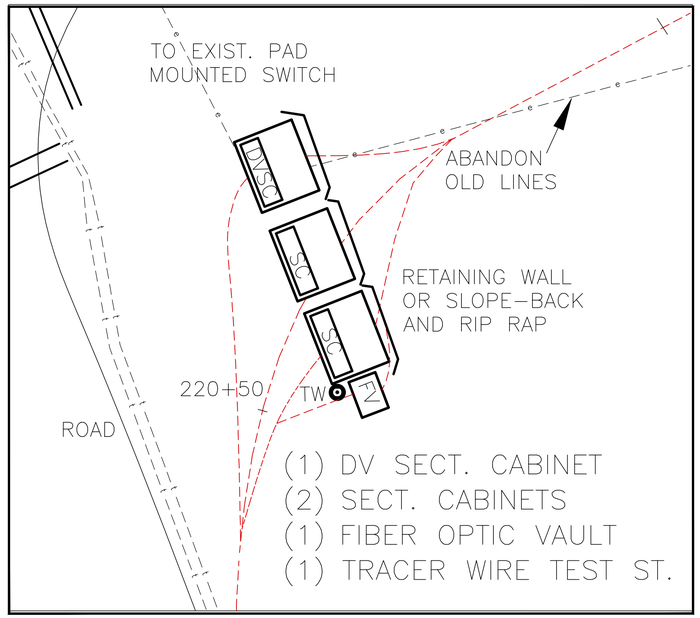

LOCATION 20
STATION 220+50
SEE DWG. C106

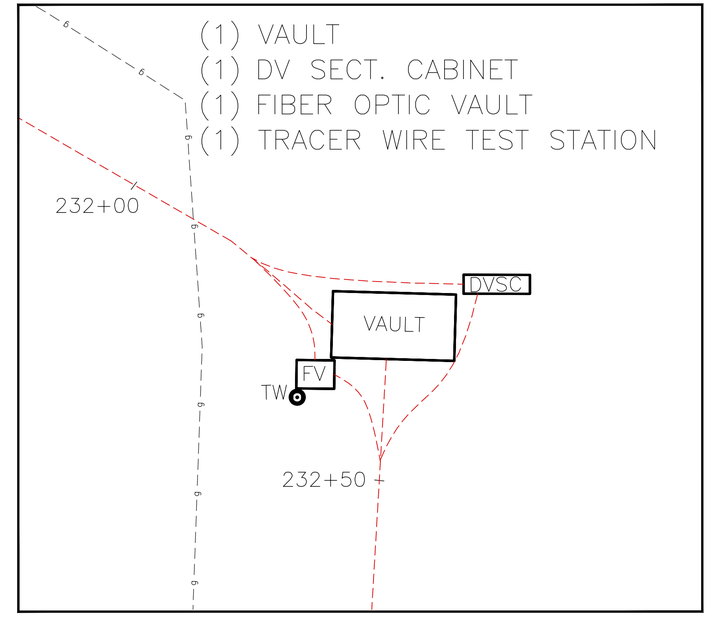

LOCATION 21
STATION 232+25
SEE DWG. C106

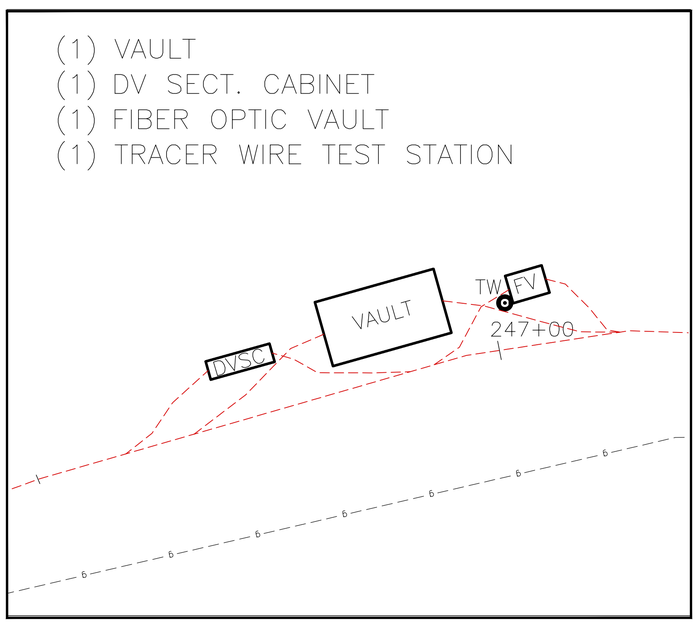

LOCATION 22
STATION 246+75
SEE DWG. C106

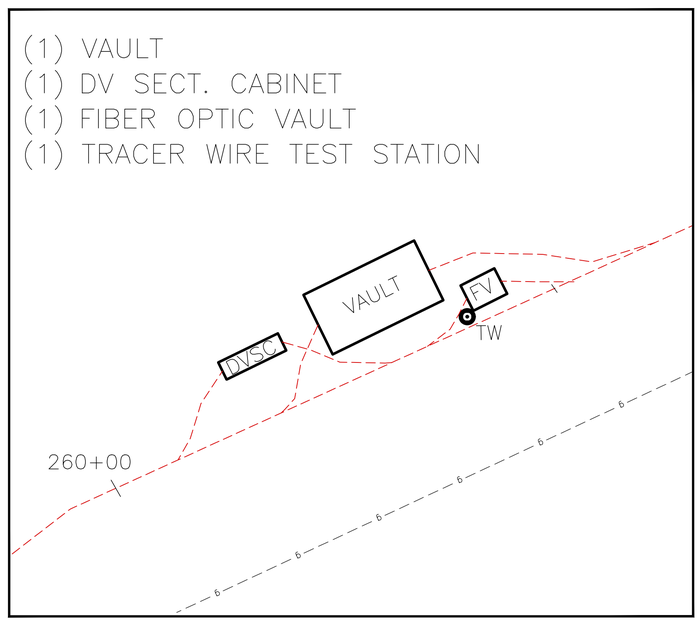

LOCATION 23
STATION 260+25
SEE DWG. C107

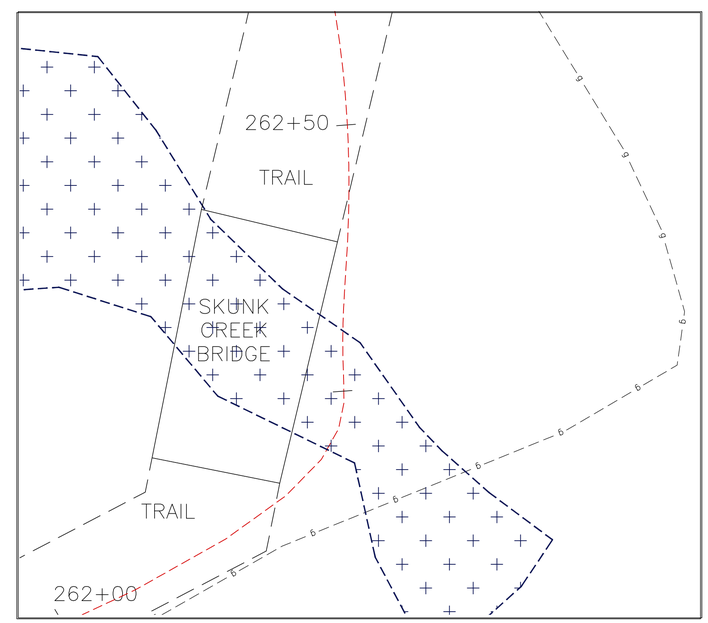

SKUNK CREEK BRIDGE DETAIL
262+25
SEE DWG. C107

No	Revisions	Date	By
A	ISSUE FOR AGENCY REVIEW	10-29-15	DHR
B	ISSUE FOR AGENCY REVIEW	02-29-16	DHR
C	ISSUE FOR BID	12-14-16	DHR

SAN MIGUEL POWER ASSOCIATION
T/MV RELIABILITY PROJECT
UNDERGROUND DISTRIBUTION LINE
LOCATIONS 19-23

Exponential Engineering Company
202 W. North Street
Cortez, Colorado 81321
Phone: (970) 564-9261
Fax: (970) 564-1420

Drawn	NRB
Designed	WEM
Checked	DHR
Approved	DHR
Scale:	
11x17	NONE
22x34	NONE
Date	09-27-15
Proj. No.	SMPA-1401
Reference	

Sheet No.
D103

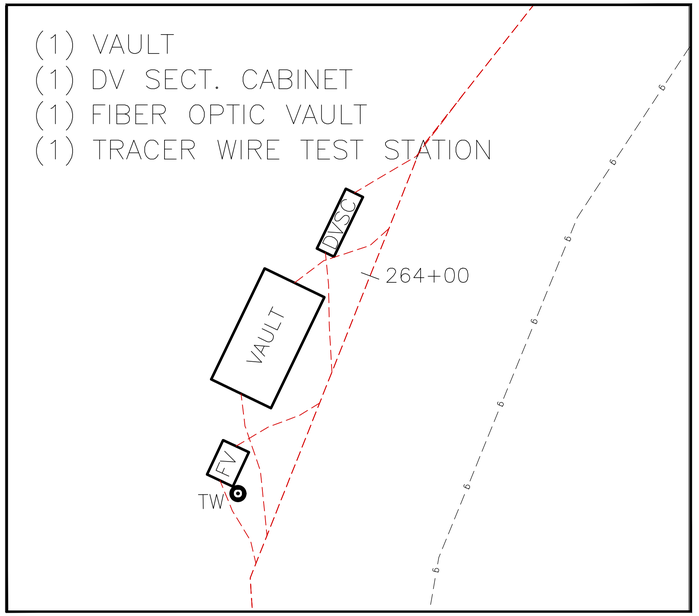

LOCATION 24
STATION 264+00
SEE DWG. C107

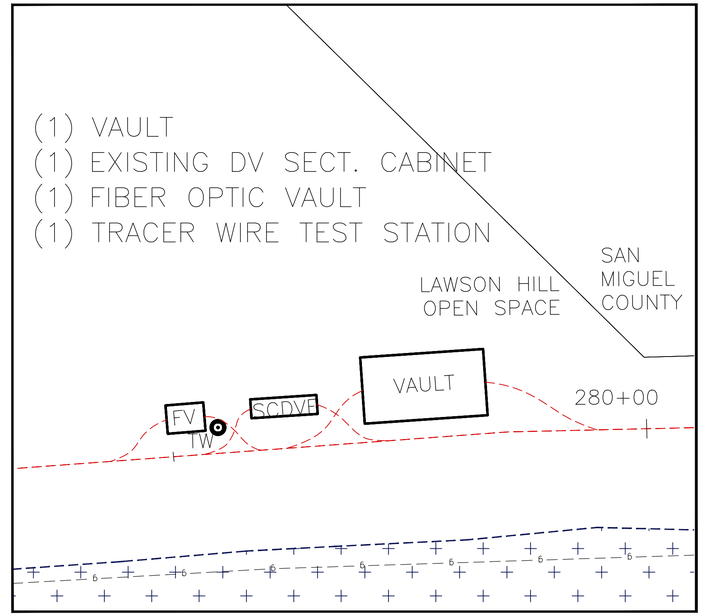

LOCATION 25
STATION 279+75
SEE DWG. C107

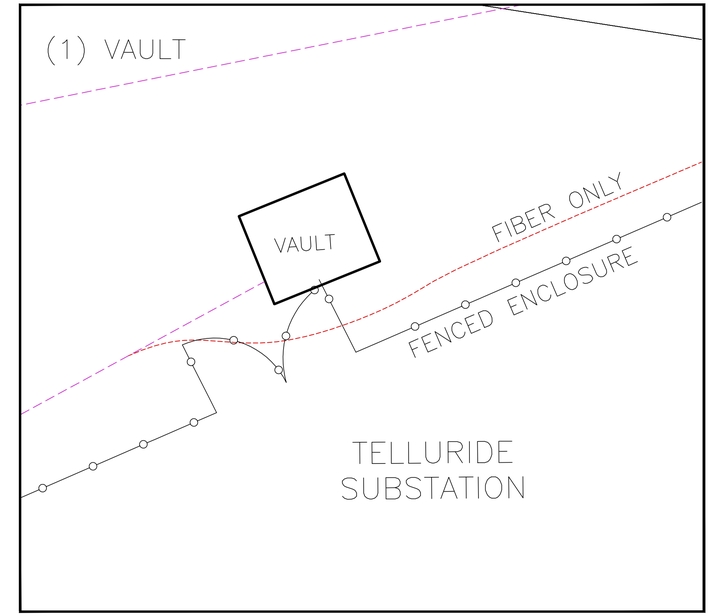

LOCATION 27
STATION 290+75
SEE DWG. C109

No	Revisions	Date	By
A	ISSUE FOR AGENCY REVIEW	10-29-15	DHR
B	ISSUE FOR AGENCY REVIEW	02-29-16	DHR
C	ISSUE FOR BID	12-14-16	DHR

SAN MIGUEL POWER ASSOCIATION
T/MV RELIABILITY PROJECT
UNDERGROUND DISTRIBUTION LINE
LOCATIONS 24-25

Exponential Engineering Company
202 W. North Street
Cortez, Colorado 81321
Phone: (970) 564-9261
Fax: (970) 564-1420

Drawn	NRB
Designed	WEM
Checked	DHR
Approved	DHR
Scale:	
11x17	NONE
22x34	NONE
Date	09-27-15
Proj. No.	SMPA-1401
Reference	

Sheet No.
D104

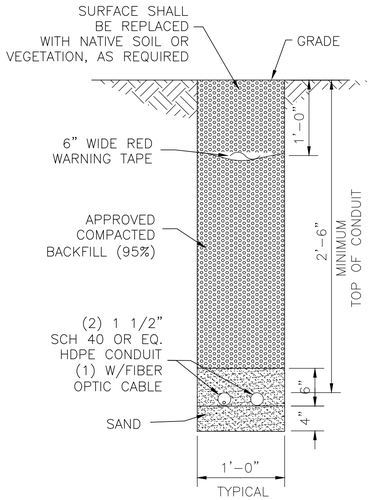

TYPICAL 'FO' CONDUIT DUCT BANK
FIBER OPTIC TRENCH DETAIL
NTS

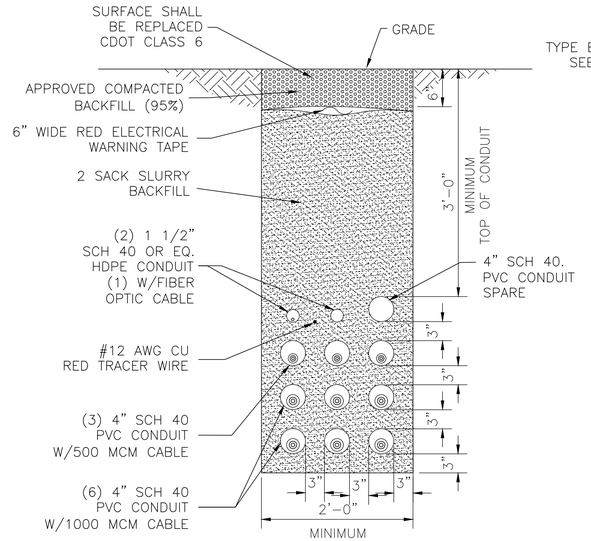

TYPICAL 'R' CONDUIT DUCT BANK
IN GRAVEL ROAD INSTALLATION DETAIL
NTS

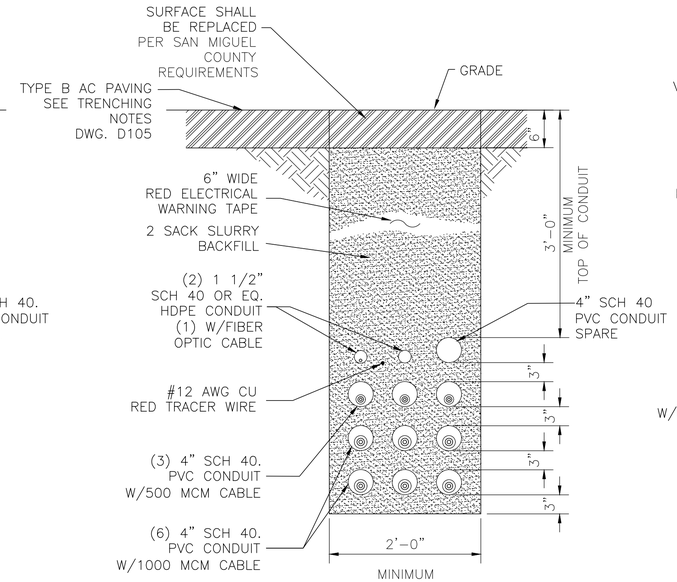

TYPICAL 'P' CONDUIT DUCT BANK IN
ASPHALT ROAD INSTALLATION DETAIL
NTS

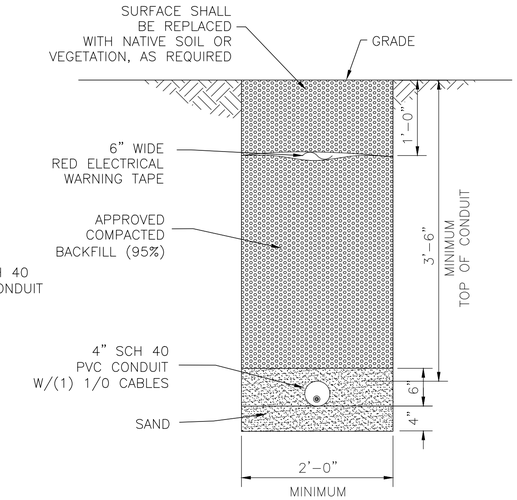

TYPICAL 'S' CONDUIT DUCT BANK SINGLE-PHASE
OUTSIDE OF ROW INSTALLATION DETAIL
NTS

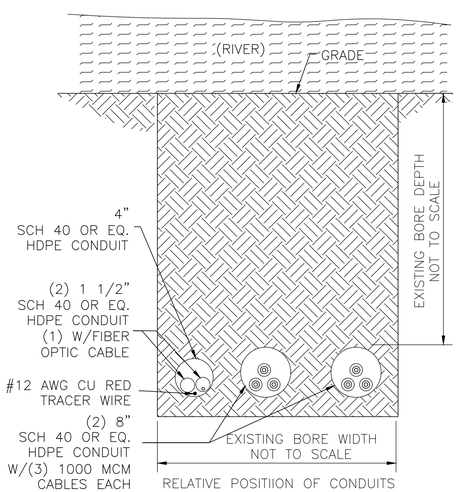

TYPICAL 'B' CONDUIT BORE
UNDER SAN MIGUEL RIVER
NTS

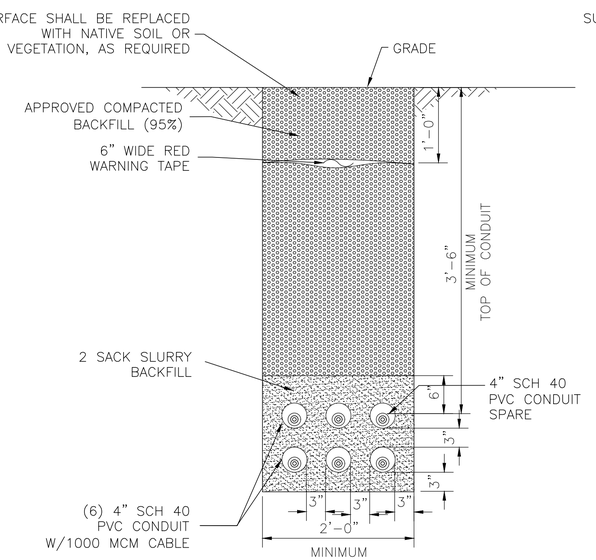

TYPICAL 'FS' THREE PHASE CONDUIT DUCT
BANK IN GRAVEL DRIVEWAY OUTSIDE OF
OF ROAD ROW
NTS

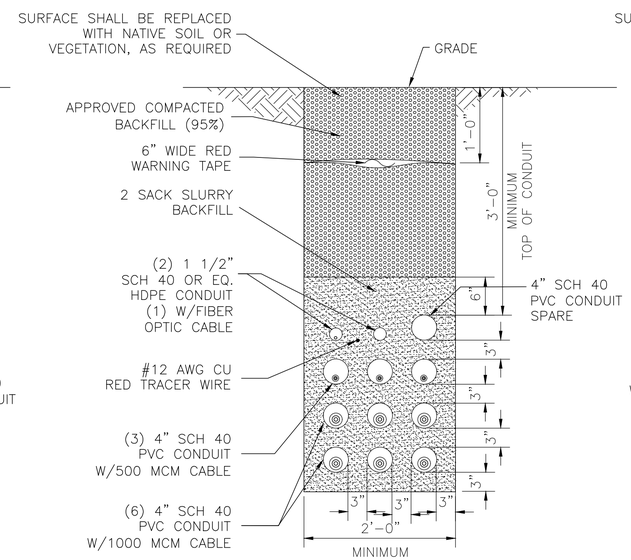

TYPICAL 'F' CONDUIT DUCT BANK OUTSIDE
OF ROAD ROW INSTALLATION DETAIL
NTS

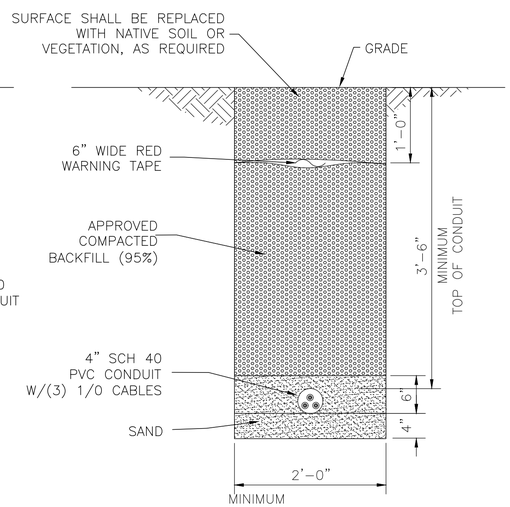

TYPICAL 'RC' CONDUIT DUCT BANK
FOR LINE REACTOR INSTALLATION DETAIL
NTS

No	Revisions	Date	By
A	ISSUE FOR AGENCY REVIEW	10-29-15	DHR
B	ISSUE FOR AGENCY REVIEW	02-29-16	DHR
C	ISSUE FOR BID	12-14-16	DHR

SAN MIGUEL POWER ASSOCIATION
TELLURIDE, CO

T/MV RELIABILITY PROJECT
DUCT BANK CROSS SECTIONS

Exponential Engineering Company
202 W. North Street
Cortez, Colorado 81321
Phone: (970) 564-9261
Fax: (970) 564-1420

Drawn	NRB
Designed	WEM
Checked	DHR
Approved	DHR
Scale:	
11x17	NONE
22x34	NONE
Date	12-17-2014
Proj. No.	SMPA-1401
Reference	

Sheet No.
D105

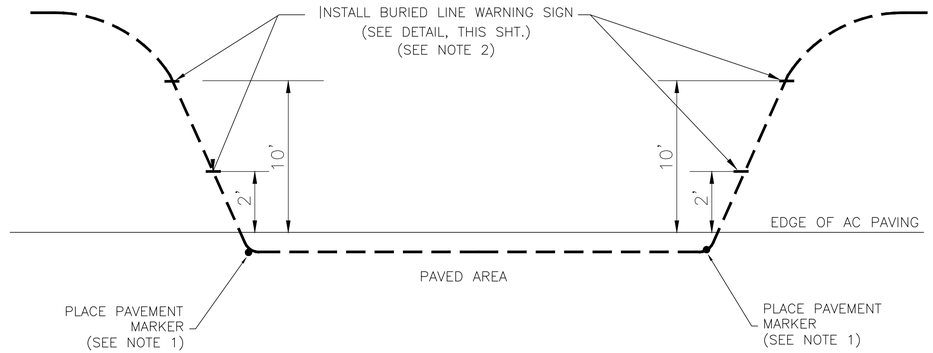

COUNTY ROAD MARKER NOTES:

1. PAVEMENT MARKERS SHALL BE A–TAG NCR–R–CMD OR APPROVED EQUAL. PAVEMENT MARKER SHALL BE INSTALLED WHERE ELECTRIC CABLE ENTERS AND EXITS PAVED ROADWAYS AND EVERY 500' IN PAVED AREAS.
2. BURIED LINE WARNING SIGNS SHALL BE INSTALLED IN UNPAVED AREAS AT 1000' INTERVALS, MAX. SIGNS SHALL ALSO BE PLACED WHERE BURIED CABLE TRANSITIONS FROM AN UNPAVED AREA TO A PAVED OR UNPAVED ROAD.

TRENCHING NOTES:

1. THE MINIMUM DEPTH FOR ANY TYPE B AC PAVING IS 3" OR MATCH EXISTING. WHICHEVER IS GREATER. AC SHALL BE TYPE B. 3/4" MAX. MEDIUM. PER SAN MIGUEL COUNTY REQUIREMENTS.
2. GRIND PAVEMENT A MINIMUM OF 1' BEYOND EACH SIDE OF THE LONGITUDINAL OR TRANSVERSE EXCAVATION AFTER TRENCH BACKFILL AND FIRST LIFT OF HOT MIX AC.
3. REPLACE PAVEMENT TO EDGE OF PAVEMENT (EP) IF THE EXCAVATION IS WITHIN 3' OF THE EP.
4. PLACE ASPHALT BASE (AB) AT THE TOP OF THE EXCAVATION WHERE THE EXCAVATION IS WITHIN 2' OF EP OR IF AB PRESENTLY EXISTS ABOVE THE EXCAVATION.
5. NO SAWCUTS WILL BE ALLOWED IN WHEEL PATHS. SAWCUT LINES SHALL BE PLACED AT ROAD CL, WITHIN SHOULDER OR MIDDLE OF TRAVEL LANE, AND OUTSIDE WHEEL PATHS.
6. MINIMUM PATCH WIDTH SHALL BE 3' WIDE.
7. PATCH WORK SHALL NOT RESULT IN "RIBBON" STRIPS OF PAVEMENT (LESS THAN 3' WIDE). EXISTING PAVEMENT WIDTHS LESS THAN 3' SHALL BE REMOVED AND PAVED WITH THE PATCH WORK.
8. IN AREAS OF NATURAL VEGETATION OR LANDSCAPING, REMOVE TOP 12" OF MATERIAL, STOCKPILE & REPLACE ON TRENCH IN A MOUND. BACKFILL COMPACTED BETWEEN 80% AND 85% RELATIVE COMPACTION.
9. UTILITY MARKERS SHALL BE INSTALLED AT 500' INTERVALS ALONG COUNTY ROAD FROM STATION 37+50 TO STATION 168+25 AND STATION 210+50 TO STATION 220+50..
10. WITHIN THE PAVED AREAS OF COUNTY ROAD THE TRENCH SHALL BE LOCATED BETWEEN THE WHEEL PATHS.
11. IF, DURING TRENCHING, A SUBSURFACE DRAINAGE IS ENCOUNTERED, THE CONTRACTOR WILL COORDINATE WITH THE OWNER AND SAN MIGUEL COUNTY TO ADJUST THE DESIGN TO PROVIDE ADEQUATE DRAINAGE ACROSS ANY SLURRY TRENCH SECTIONS.
12. REFER TO SPECIFICATIONS FOR ADDITIONAL TRENCHING REQUIREMENTS.

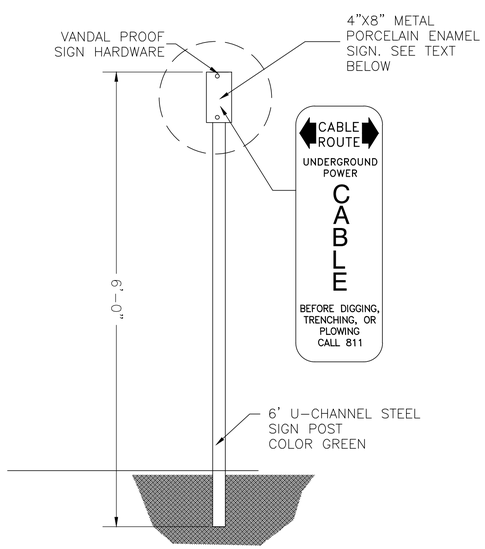

TYPICAL
UTILITY MARKERS
NTS

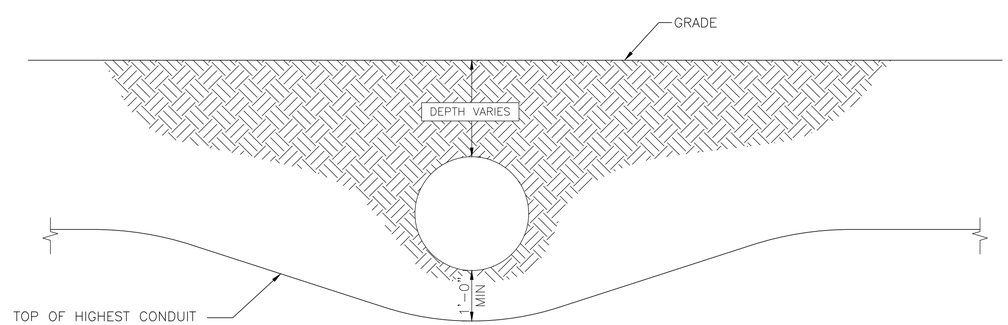

TYPICAL STORM DRAIN CROSSING
NTS

No	Revisions	Date	By
A	ISSUE FOR REVIEW	10–13–15	DHR
B	ISSUE FOR AGENCY REVIEW	02–29–16	DHR
C	ISSUE FOR BID	12–14–16	DHR

SAN MIGUEL POWER ASSOCIATION
TELLURIDE, CO

T/MV RELIABILITY PROJECT
DUCT BANK DETAILS

Exponential Engineering Company
202 W. North Street
Cortez, Colorado 81321
Phone: (970) 564-9261
Fax: (970) 564-1420

Drawn	NRB
Designed	DHR
Checked	DHR
Approved	DHR
Scale:	
11x17	NONE
22x34	NONE
Date	10–13–15
Proj. No.	SMPA–1401
Reference	

Sheet No.
D106

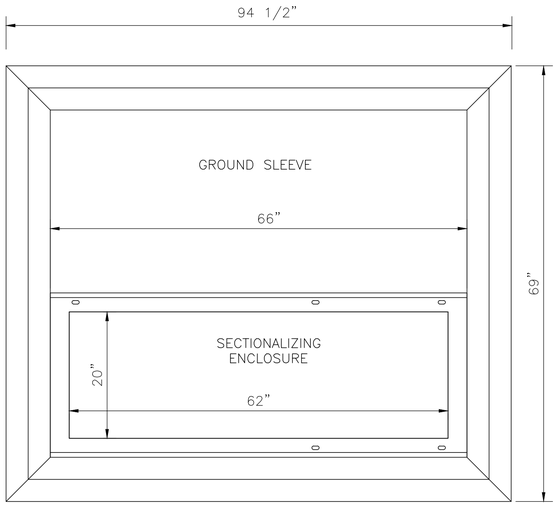

SECTION A
NTS

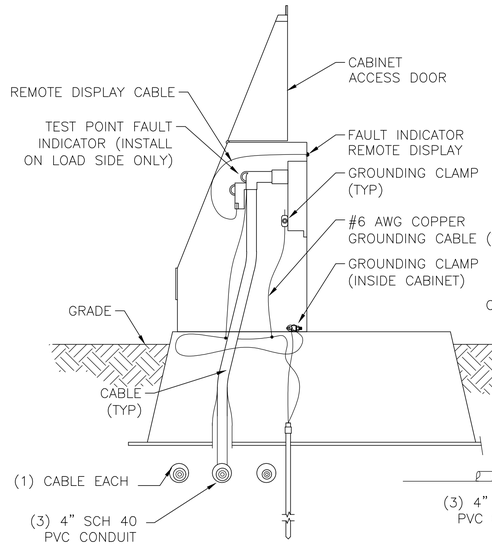

SECTION C
NTS

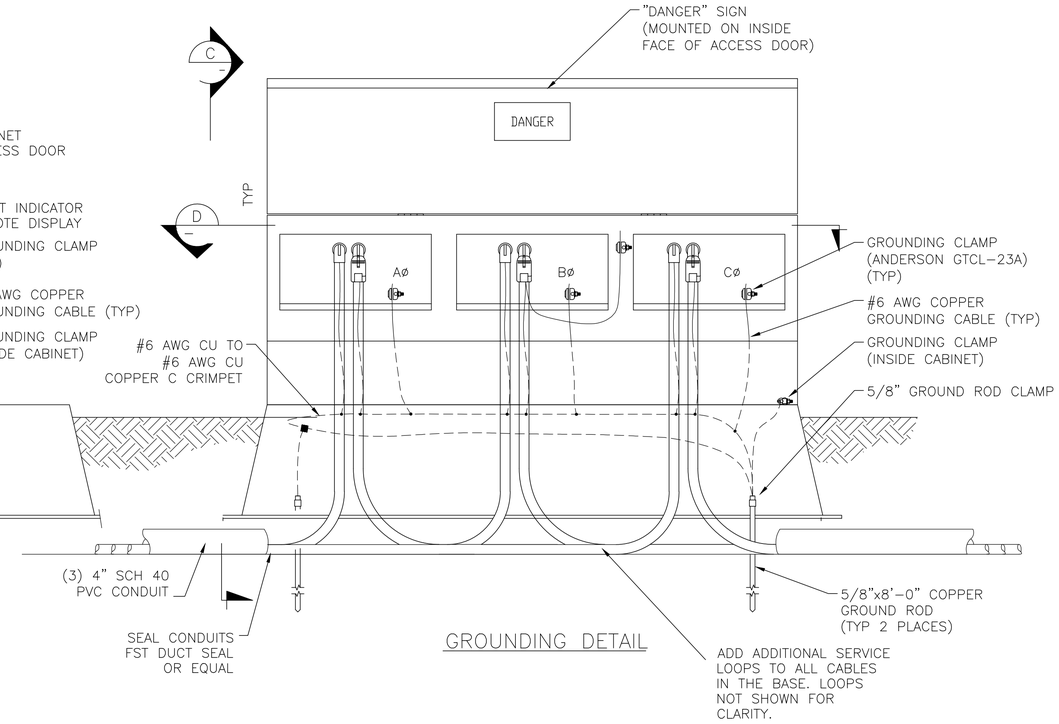

GROUNDING DETAIL

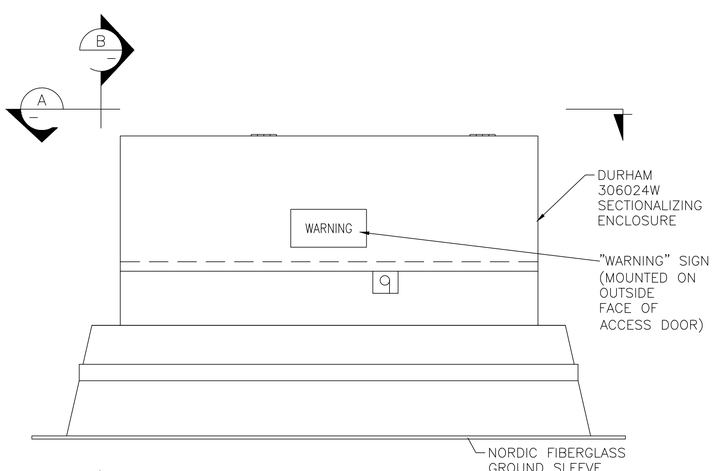

SECTIONALIZING CABINET/GROUND SLEEVE DETAIL
NTS

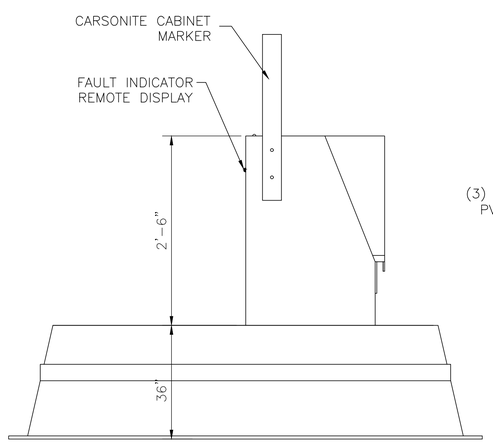

SECTION B
NTS

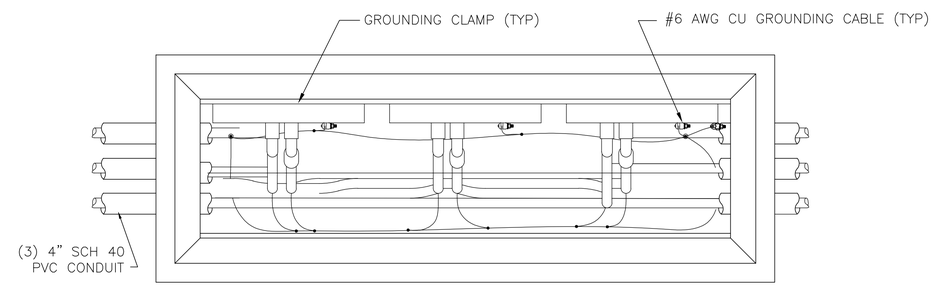

SECTION D
NTS

TYPICAL SECTIONALIZING CABINET
NTS

NOTES:

1. REFER TO SPECIFICATIONS FOR INSTALLATION DETAILS

No	Revisions	Date	By
A	ISSUE FOR AGENCY REVIEW	10-29-15	DHR
B	ISSUE FOR AGENCY REVIEW	02-29-16	DHR
C	ISSUE FOR BID	12-14-16	DHR

SAN MIGUEL POWER ASSOCIATION
TELLURIDE, CO

T/MV RELIABILITY PROJECT
SECTIONALIZING CABINET DETAILS

Exponential Engineering Company
202 W. North Street
Cortez, Colorado 81321
Phone: (970) 564-9261
Fax: (970) 564-1420

Drawn	NRB
Designed	WEM
Checked	DHR
Approved	DHR
Scale:	
11x17	NONE
22x34	NONE
Date	10-13-15
Proj. No.	SMPA-1401
Reference	

Sheet No.
D107

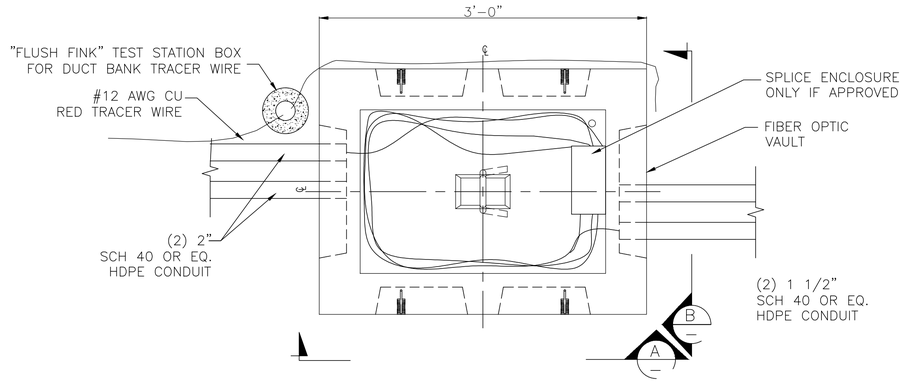

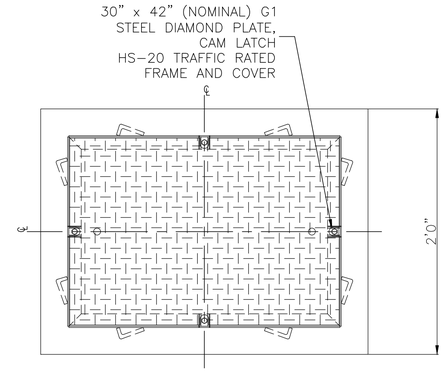

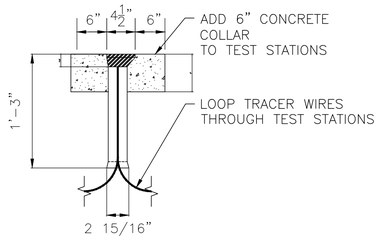

TRACER WIRE TEST STATION

NTS

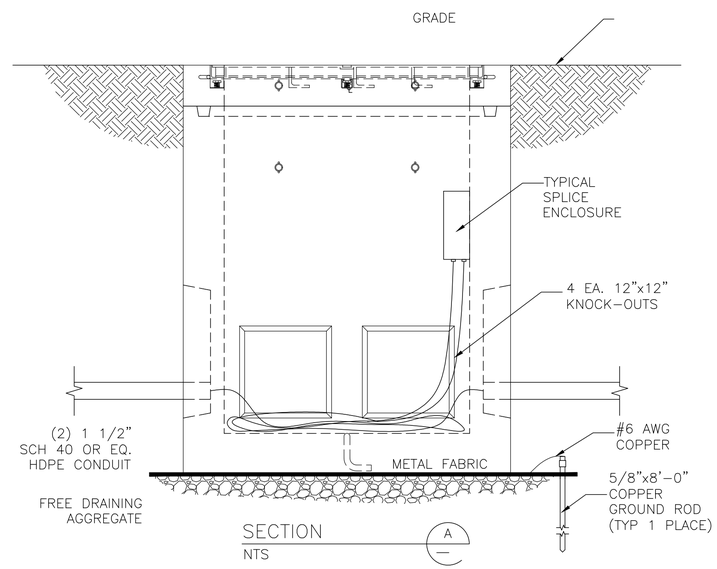

SECTION A

NTS

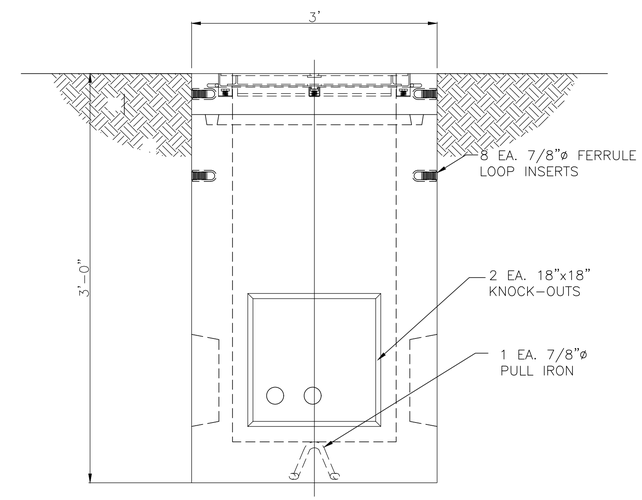

SECTION B

NTS

NOTES:

1. A MINIMUM OF 150' TAILS SHALL BE COILED IN THE VAULT.
2. CONTRACTOR TO FIELD VERIFY ACTUAL VAULT DEPTHS. CONTRACTOR IS RESPONSIBLE FOR ALL SAFETY & ENTRY/EXIT REQUIREMENTS.
3. CONTRACTOR TO VERIFY ALL DIMENSIONS AND OPENING LOCATIONS.
4. TOLERANCES PER ASTM C-858 STANDARD SPECIFICATION FOR UNDERGROUND PRECAST CONCRETE UTILITY STRUCTURES.
5. SEE MANUFACTURER'S DRAWINGS FOR MORE DETAILS.
6. ALL DIMENSIONS ARE TYPICAL.
7. SPLICES ARE NOT ANTICIPATED. SPLICES MAY BE INSTALLED IF APPROVED BY OWNER.
8. TERMINATED DUCTS SHALL BE SEALED.
9. REFER TO SPECIFICATIONS FOR VAULT INSTALLATION DETAILS.

No	Revisions	Date	By
A	ISSUE FOR AGENCY REVIEW	10-29-15	DHR
B	ISSUE FOR AGENCY REVIEW	02-29-16	DHR
C	ISSUE FOR BID	12-14-16	DHR

SAN MIGUEL POWER ASSOCIATION
TELLURIDE, CO

T/MV RELIABILITY PROJECT
FIBER-OPTIC VAULT DETAILS

Exponential Engineering Company
202 W. North Street
Cortez, Colorado 81321
Phone: (970) 564-9261
Fax: (970) 564-1420

Drawn	NRB
Designed	WEM
Checked	DHR
Approved	DHR
Scale:	
11x17	NONE
22x34	NONE
Date	10-13-15
Proj. No.	SMPA-1401
Reference	

Sheet No.
D108

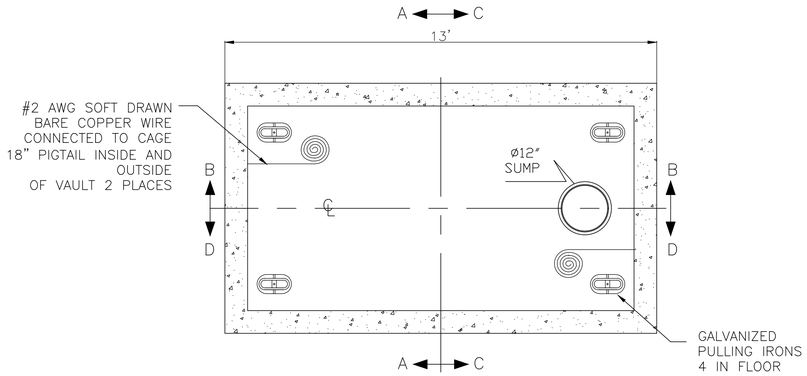

PLAN VIEW
NTS

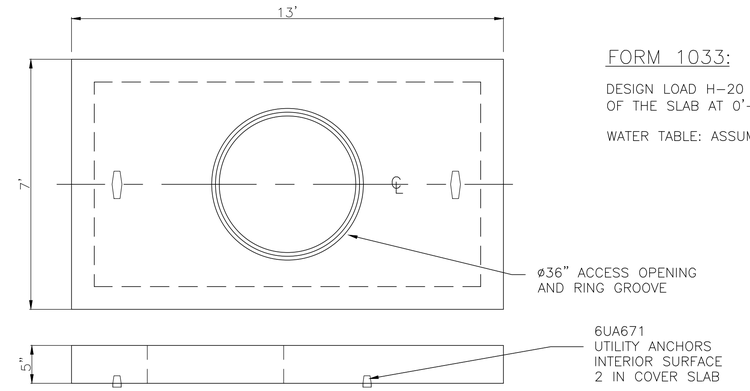

TYPICAL COVER SLAB
NTS

FORM 1033:

DESIGN LOAD H-20 TRAFFIC LOADED WITH THE TOP OF THE SLAB AT 0'-10" TO 3'-0" BELOW GRADE.

WATER TABLE: ASSUMED AT FINISHED GRADE.

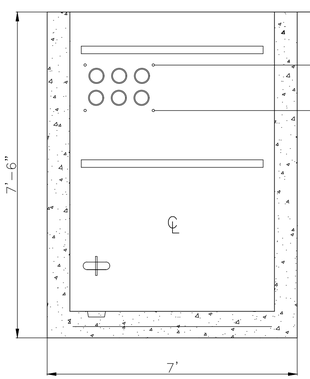

VIEW A-A

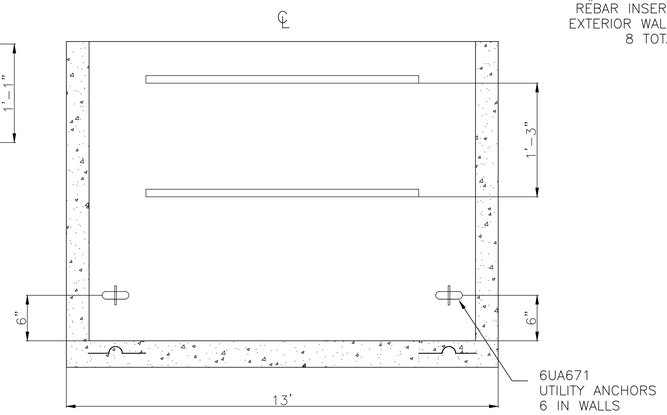

VIEW B-B

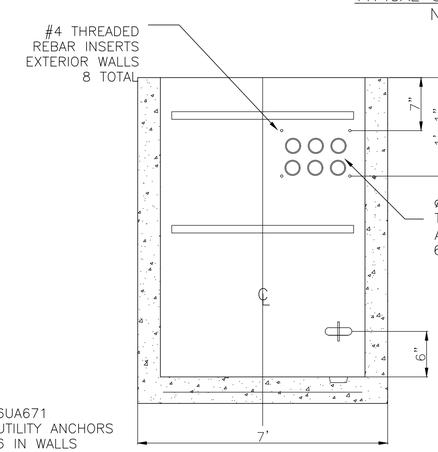

VIEW C-C

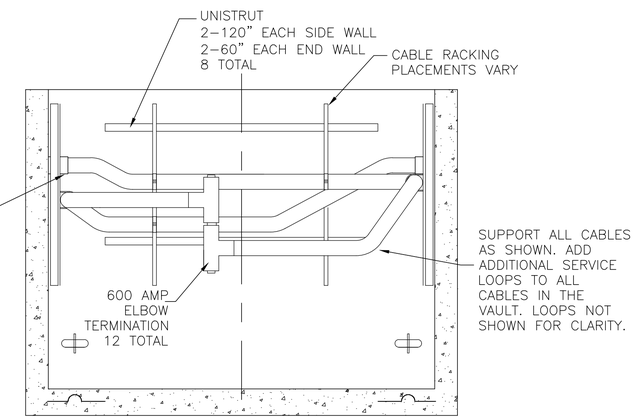

VIEW D-D
SOME PHASE CABLES HIDDEN FOR CLARITY

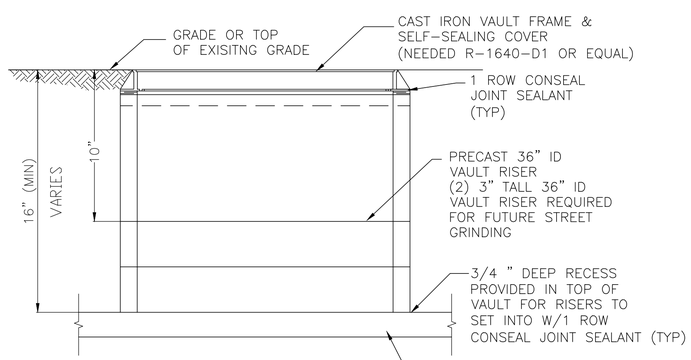

TYPICAL VAULT RISER
NTS

NOTES:

1. PULLING HARDWARE SHALL BE RATED FOR 6,000lbs TENSION, MINIMUM.
2. ALL CHIMNEY RINGS SHALL BE MORTARED OR OTHERWISE "KEYED" TO PREVENT HORIZONTAL DISPLACEMENT AND SHALL BE SECURELY MORTARED TO VAULT ROOF.
3. VAULT RING SHALL BE SECURELY FASTENED TO THE VAULT ROOF OR CHIMNEY USING INSERTS AND BOLTS OR OTHER MEANS WITH PRIOR APPROVAL.
4. REINFORCING STEEL SHALL BE BONDED TO #2 AWG SOFT DRAWN BARE COPPER BONDING JUMPERS.
5. ANCHORS SHALL BE INSTALLED ON THE OUTSIDE OF VAULT TO ALLOW A REBAR TIE-IN TO THE DUCT BANK SLURRY.
6. REFER TO SPECIFICATIONS FOR VAULT INSTALLATION DETAILS
7. SEE MANUFACTURER'S DRAWING FOR ADDITIONAL VAULT DETAILS
8. CONTRACTOR TO FIELD VERIFY ACTUAL VAULT DEPTHS. CONTRACTOR IS RESPONSIBLE FOR ALL SAFETY & ENTRY/EXIT REQUIREMENTS.
9. TERMINATED DUCTS SHALL BE SEALED.

No	Revisions	Date	By
A	ISSUE FOR AGENCY REVIEW	10-29-15	DHR
B	ISSUE FOR AGENCY REVIEW	02-29-16	DHR
C	ISSUE FOR MANUFACTURER REVIEW	10-20-16	WEM
D	ISSUE FOR BID	12-14-16	DHR

SAN MIGUEL POWER ASSOCIATION
TELLURIDE, CO

T/M RELIABILITY PROJECT
ELECTRIC VAULT DETAILS

Exponential Engineering Company
202 W. North Street
Cortez, Colorado 81321
Phone: (970) 564-9261
Fax: (970) 564-1420

Drawn	NRB
Designed	WEM
Checked	DHR
Approved	DHR
Scale:	
11x17	NONE
22x34	NONE
Date	10-29-15
Proj. No.	SMPA-1401
Reference	

Sheet No.
D109

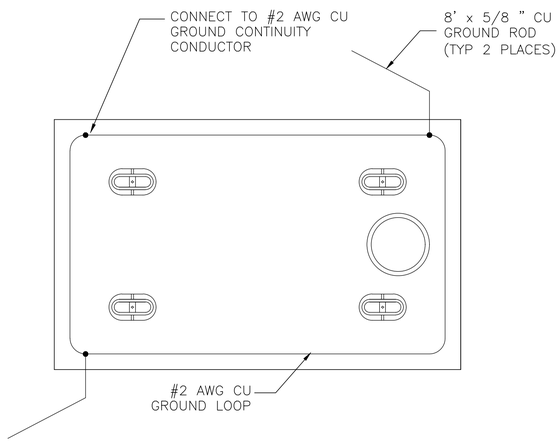

TYPICAL GROUND WIRE DETAIL
NTS

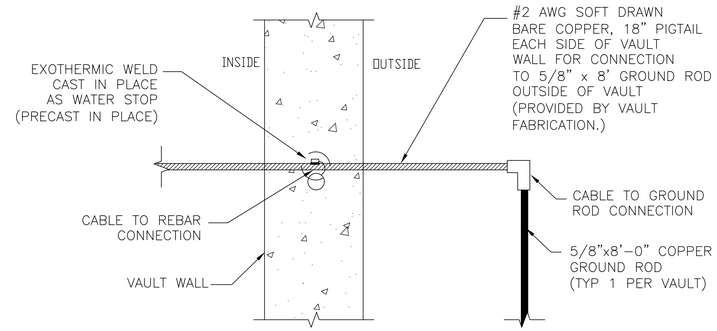

TYPICAL GROUND WIRE DETAIL
NTS

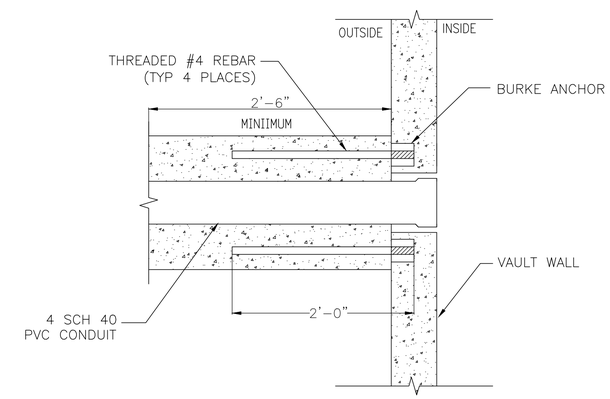

TYPICAL CABLE ENTRANCE DETAIL
NTS

No	Revisions	Date	By
A	ISSUE FOR AGENCY REVIEW	10-29-15	DHR
B	ISSUE FOR AGENCY REVIEW	02-29-16	DHR
C	ISSUE FOR BID	12-14-16	DHR

SAN MIGUEL POWER ASSOCIATION
TELLURIDE, CO

T/MV RELIABILITY PROJECT
ELECTRIC VAULT DETAILS

Exponential Engineering Company
202 W. North Street
Cortez, Colorado 81321
Phone: (970) 564-9261
Fax: (970) 564-1420

Drawn	NRB
Designed	WEM
Checked	DHR
Approved	DHR
Scale:	
11x17	NONE
22x34	NONE
Date	10-13-15
Proj. No.	SMPA-1401
Reference	

Sheet No.
D110

Short Ct
Two Rivers Dr
Edgewater Rd
County Road 63L
Possible access
Power line route

Power line route
Access route
Greenfields Ln
San Miguel River Dr
Rio Vistas Rd
Society Dr
Society Dr
Evergreen Ct

378702
Page 1 of 7
SAN MIGUEL COUNTY, CO
DORIS RUFFE CLERK-RECORDER
10-14-2005 11:29 AM Recording Fee $36.00

378702

After recording return to:

SMPA P.O. BOX 547 TELLURIDE CO 81435 ATTN: KEVIN

GRANT OF UTILITY ACCESS EASEMENT
TO SAN MIGUEL POWER ASSOCIATION, INC.
Lot H/I and Tract 503A
Lawson Hill P.U.D., San Miguel County, Colorado

This grant of easement ("**Grant**") made effective as of October 14, 2005 is made by Telecam Partnership II, LLP, a Colorado limited partnership ("**Grantor**") to San Miguel Power Association, Inc. ("**Grantee**")

WHEREAS, Grantor is the record owner of the following real property situate in San Miguel County, Colorado, described as follows by reference to documents recorded in the Office of the Clerk and Recorder for San Miguel County, Colorado (collectively, "**Property**"):

Lot H/I, according to the final plat recorded at Reception No. 378712

Tract 503A, according to the final plat recorded at Reception No. 378712

NOW THEREFORE, for good and valuable consideration, the sufficiency of which the parties hereby acknowledge, the parties agree as follows.

1. **Location of Utility Access Easement Area.** A Utility Access Easement Area twelve (12) feet in width is established on a portion of the Property in that area described as the Utility Access Easement on attached **Exhibit A**.

2. **Grant of Easement.** Grantor, as record owner of the Property, hereby grants and conveys to Grantee a permanent, non-exclusive easement ("**Easement**") over the Utility Access Easement Area for the following purposes ("**Allowed Uses**"): Vehicular ingress and egress access, including but not limited to access for heavy machinery and equipment, over and across the Utility Access Easement Area to enable construction and maintenance of its electric transmission lines and related facilities, equipment and systems located on Tracts 503, 503A and 509B. Grantee may access from Society Drive to the Utility Access Easement Area as Grantor's invitee along the access described in the document recorded at Reception No. 376605. Notwithstanding anything to the contrary, Grantor reserves the right to use of the Utility Access Easement Area so long as Grantor does not interfere with or hinder Grantee's proper use of the Easement granted herein.

3. **Limitations on Grant of Easement.** Grantee's use of the Easement is subject to the following limitations and restrictions:

   A. Grantee's use of the Utility Access Easement Area shall in no way hinder or prevent Grantor's proper and reasonable use and enjoyment of the Property.

KB JC as AIF for HCJ

7

B. Grantee may only use the Utility Access Easement Area for the Allowed Uses and no other uses. Grantee is not authorized to install utilities within the Utility Access Easement Area.

C. All work will be done in a professional workmanlike manner. Grantee shall comply with any applicable laws and regulations.

4. **Maintenance of Easement Area.** Grantee shall, at its own expense, improve and maintain the Utility Access Easement Area to the extent necessary to use the Easement granted herein. Such improvements include, but are not limited to, tree removal, grading and landscaping. Notwithstanding, Grantee may not pave the Utility Access Easement Area.

5. **Restoration of the Property.** Grantee, at its sole cost and expense, shall promptly repair and fully restore to its original condition any portions of the Property outside the Utility Access Easement Area that are damaged due to its use of the Easement granted herein. Such obligation includes restoring surrounding landscaping to its original condition as reasonably as practicable.

6. **Gate.** Grantee may, at its sole cost and expense, install a gate on the Utility Access Easement Area so long as the combination or key to the gate is given to the Grantor and all others who are granted the right to motorized use of the Utility Access Easement Area, and so long as such gate does not interfere with use of the Utility Access Easement Area by non-motorized trail users.

7. **Relocation.** Grantor reserves the right to relocate the Utility Access Easement Area, at Grantor's sole cost and expense, to a location on the Property that provides equal or better quality access conditions than the original Utility Access Easement Area. The Grantee must consent in writing to the location of the relocated Utility Access Easement Area, and such consent must be timely and not unreasonably withheld.

8. **Insurance.** Prior to using the Easement, Grantee agrees to obtain and maintain at its expense at all times during its use of the Easement, a comprehensive general liability insurance policy and property damage insurance policy, or other such policy as may be required to insure Grantor against liability for bodily injury and property damage, and to compensate Grantor for any damage to the Grantor's Property and residential and other improvements located thereon which may arise out of or result from Grantee's use of the Easement and the Improvements, in the minimum amount of $1,000,000.00 combined single limit for bodily injury and property damage. Grantor shall be named as an additional insured party thereon. The insurance carrier name and form and substance of Grantee's policy shall be promptly provided to Grantor upon request by Grantor. Grantee shall deliver to Grantor an initial certificate of such insurance and subsequently upon request by Grantor.

9. **Indemnification.** Grantee shall indemnify and hold harmless Grantor from all claims, demands, fines, damages, penalties and liens, of any nature whatsoever, including the threat of same, that arise out of, in any respect, from Grantee's use of the easement granted herein. The foregoing obligation to indemnify and hold harmless includes reimbursement of Grantor, on demand, of any judgments, settlements, damages, fines, and other monies paid on account of such claims or liens, or threatened claims or liens. Such obligation to indemnify and hold harmless further includes reimbursement of Grantor, on demand, for all reasonable costs, including reasonable attorneys fees.

KM JC

10. **Easement Runs with Land.** The grant of Easement herein, and all rights and obligations herein, shall run with the land and shall be binding upon and shall inure to the benefit of, and be a burden upon, the heirs, designees, successors, and assigns of all parties to this agreement.

11. **Modification.** This Easement may be amended only by the written agreement of the parties hereto, or their respective successors and assigns.

12. **No Further Rights; No Third Party Rights.** Except as expressly set forth herein, nothing contained herein shall be construed as creating any rights in any third persons or parties. Nothing contained herein shall be interpreted or construed to create a public dedication of the easements. It is understood and agreed that this Easement is an easement only and in no way grants or conveys any part of the underlying fee simple estate of any lands owned by Grantor.

13. **Enforcement and Remedies.** This Easement and the rights and obligations of the Parties hereto shall be interpreted, construed and enforced in accordance with the laws of the State of Colorado. Venue is restricted to San Miguel County, Colorado. A Party may pursue any and all available rights and remedies in enforcing their rights hereunder. A Party has a right to specific performance to ensure performance of another Parties obligations hereunder. In any action for enforcement of rights hereunder, the prevailing party shall be entitled to an award for recovery of their costs and fees, including reasonable attorney fees. Except as may be expressly otherwise stated or provided, with respect to all required acts of the Parties, time is of the essence.

14. **Miscellaneous.** Each provision of this agreement is declared to be independent of and severable from the remainder of the agreement. If any provision contained herein shall be held to be invalid or unenforceable or not to run with the land, such holding shall not affect the validity, enforceability, or other effect of the remainder of the agreement. Facsimile signatures shall be deemed originals for purposes of enforcement of this agreement. This agreement may be executed in counterparts, which, when taken together, shall constitute one agreement.

Grantor, Telecam Partnership II, Ltd., a Colorado limited liability partnership,

By: Joni Cheroske as Atty in fact for Henson L. Jones, Jr.

Joni Cheroske as attorney-in-fact for
Henson L. Jones, Jr., President of Macelet, Inc.,
General Partner of Telecam Partnership I, Limited,
General Partner of Telecam Partnership II, LLP

STATE OF COLORADO)
) ss.
COUNTY OF SAN MIGUEL)

Acknowledged, subscribed and sworn to before me this 13 day of October, 2005, by Joni Cheroske as attorney-in-fact for Henson L. Jones, Jr., President of Macelet, Inc., General Partner of Telecam Partnership I, Limited, General Partner of Telecam Partnership II, LLP.

Witness my hand and official seal.

My commission expires: My Commission Expires 9/23/2008

Stephanie Warner
Notary Public

STEPHANIE R. WARNER NOTARY PUBLIC STATE OF COLORADO

KB

FOLEY ASSOCIATES, INC.
CIVIL ENGINEERING AND LAND SURVEYING
P. O. BOX 1385
TELLURIDE, CO 81435
970-728-6153

PROPERTY DESCRIPTION

A part of Tract 503A and Lot HI, Lawson Hill P.U.D., Phase 15, according to the plat recorded in the office of the Clerk and Recorder in Plat Book 1 at Page 378712, San Miguel County, State of Colorado, described as follows:

Commencing at the southwest corner of said Lot HI, said point being the beginning of a curve to the left, of which the radius point lies N10°02'44"W, a radial distance of 60.00 feet; thence northeasterly along the northwesterly line of said Lot HI and along said arc, through a central angle of 33°46'11", a distance of 35.36 feet; thence continuing along said northwesterly line, N46°11'05"E, a distance of 14.40 feet to the POINT OF BEGINNING; thence continue along the northwesterly and westerly line of said Lot HI the next three courses: 1), N46°11'05"E, a distance of 182.28 feet; 2) N73°35'38"E, a distance of 15.00 feet to a point of non-tangent curvature; 3) northerly, along the arc of a 225.00 foot radius curve to the right, through a central angle of 13°22'23", an arc length of 52.52 feet, the chord of which bears N09°43'11"W, a distance of 52.40 feet; thence N28°10'55"E, a distance of 25.08 feet; thence N45°05'22"E, a distance of 64.81 feet; thence N23°57'23"E, a distance of 59.52 feet; thence N15°37'49"E, a distance of 68.08 feet to a point of non-tangent curvature; thence northwesterly, along the arc of a 34.00 foot radius curve to the left, through a central angle of 106°18'31", an arc length of 63.08 feet, the chord of which bears N36°38'19"W, a distance of 54.42 feet to a point on the westerly line of said Tract 503A; thence northerly, along said westerly line and along the arc of a non-tangent 75.00 foot radius curve to the left, through a central angle of 09°32'35", an arc length of 12.50 feet, the chord of which bears N18°21'31"W, a distance of 12.48 feet to a point of non-tangent curvature; thence southeasterly, along the arc of a 46.00 foot radius curve to the right, through a central angle of 109°36'58", an arc length of 88.01 feet, the chord of which bears S39°56'21"E, a distance of 75.18 feet; thence S15°37'49"W, a distance of 70.09 feet; thence S23°57'23"W, a distance of 62.63 feet; thence S45°05'22"W, a distance of 65.26 feet; thence S28°10'55"W, a distance of 19.90 feet to a point of non-tangent curvature; thence southerly, along the arc of a 213.00 foot radius curve to the left, through a central angle of 15°42'44", an arc length of 58.41 feet, the chord of which bears S11°46'46"E, a distance of 58.23 feet; thence S73°35'38"W, a distance of 24.41 feet; thence S46°11'05"W, a distance of 156.36 feet; thence S60°25'30"W, a distance of 23.72 feet; thence N43°48'55"W, a distance of 6.16 feet to the POINT OF BEGINNING.

Bearings are based on the line from Corner 2 to Corner 1 of The Boston Placer MS 2019 assumed as N 81°09'14" W to be in conformance with project bearings established by KKBNA, Inc. The bearing of this same line was determined by BLM

Exhibit A

KS JC HLG AIF

Dependent Resurvey in 1980 to be N 82°35' W. Both corners are monumented by 3.25" BLM brass caps set on steel posts.

COLORADO REGISTERED
J. DAVID FOLEY
6/30/05
24954
PROFESSIONAL LAND SURVEYOR

J. David Foley, P.L.S. #24954

X:\Jobs\JOBS1990\90245 Lawson\DOC\Phase 15\Utility Access Easement.LEG.doc

CURVE TABLE					
CURVE	ARC LENGTH	RADIUS	DELTA	CHORD LENGTH	CHORD BEARING
C1	35.36	60.00	33°46'11"	34.85	N63°04'11"E
C2	12.50	75.00	9°32'35"	12.48	N18°21'31"W
C3	63.08	34.00	106°18'31"	54.42	N36°38'19"W
C4	88.01	46.00	109°36'58"	75.18	N39°56'21"W
C5	58.41	213.00	15°42'44"	58.23	N11°46'46"W

LINE TABLE		
LINE	LENGTH	BEARING
L1	14.40'	N46°11'05"E
L2	15.00'	N73°35'38"E
L3	6.16'	N43°48'55"W

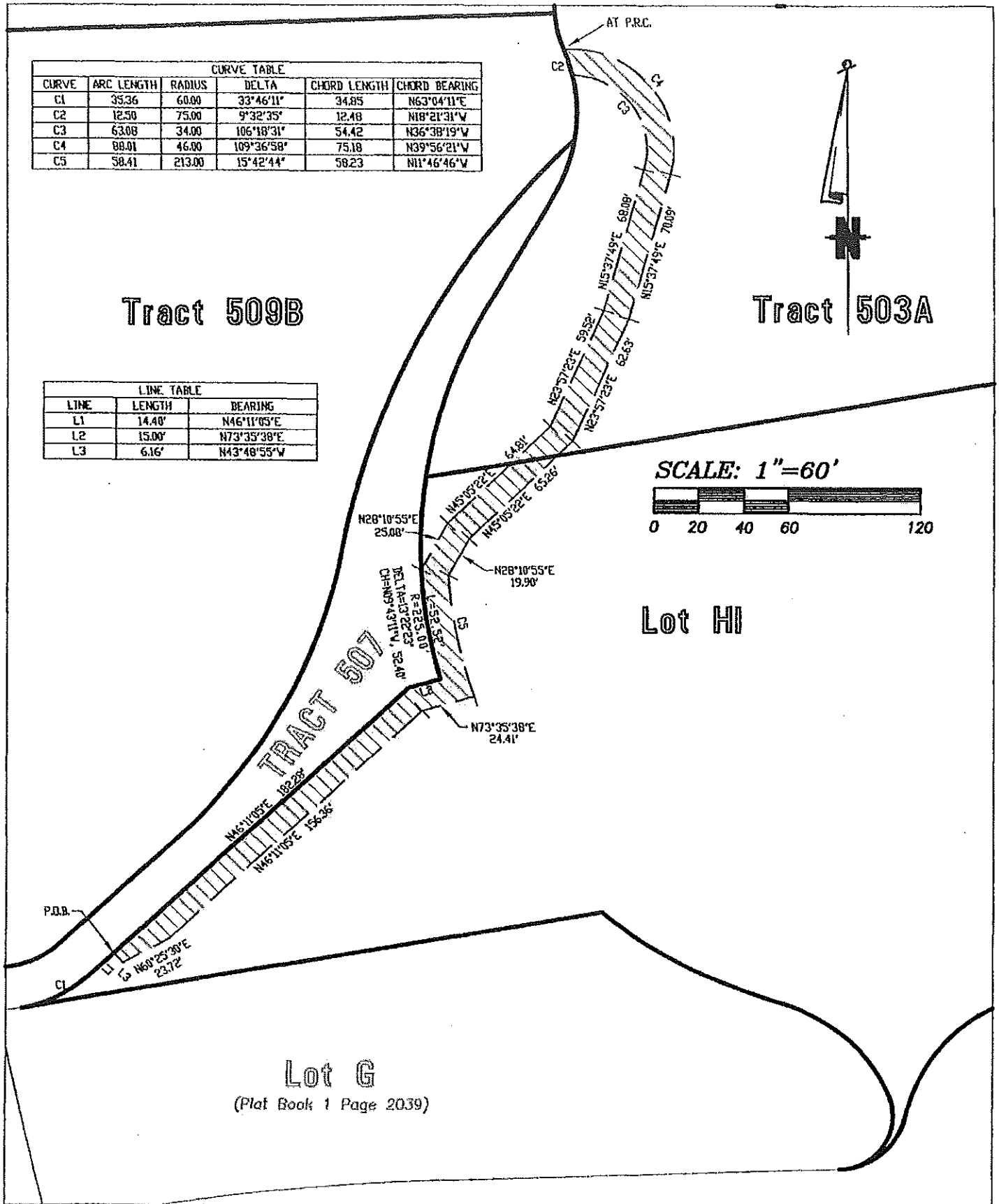

FOLEY ASSOCIATES, INC.
ENGINEERING · PLANNING · SURVEYING

Exhibit
UTILITY ACCESS EASEMENT

Client:
Contact:

Sheet No. 1

X:\Jobs\JOBS1990\90245 Lawson\dwg\Phase 15\Utility Access Easement.dwg, 06/30/2005 08:04:00 PM, df

Kg JC HLB

Grantee, San Miguel Power Association, Inc.,
a Colorado corporation,

By: Ken P Brodrick

Title: SERVICE PLANNER SUPERVISOR

STATE OF COLORADO)
) ss.
COUNTY OF San Miguel)

Acknowledged, subscribed and sworn to before me this 12 day of October, 2005, by _____, as _____ of San Miguel Power Association, Inc.

Witness my hand and official seal.

My commission expires: My Commission Expires 9/23/2008

Stephanie Warner
Notary Public

STEPHANIE WARNER NOTARY PUBLIC STATE OF COLORADO

KB JC HJ IE

EASEMENT FOR POWER LINE AND RELATED FACILITIES

THIS EASEMENT AGREEMENT FOR POWER LINE AND RELATED FACILITIES ("**Agreement**") dated June 22, 2016 ("**Effective Date**") is made by and between The Lawson Hill Open Space Land Owners Company, LLC, a Colorado limited liability company ("**Grantor**") and San Miguel Power Association, Inc., a Colorado nonprofit corporation ("**Grantee**") whose address is PO Box 817, Nucla, Colorado 81424. Grantor and Grantee may hereafter be referred to individually as a "**Party**" and collectively as the "**Parties.**"

RECITALS

A. Grantor is the owner of certain real property located in San Miguel County, Colorado, more particularly described on attached **Exhibit "A"** ("**Grantor Property**").

B. Grantee has requested and Grantor is willing to grant and convey to Grantee an easement to accommodate certain underground electrical distribution line with related facilities and fiber optic telecommunication line with related facilities, equipment and systems used or useable for the transmission or provision of commercial telecommunications and fiber optic services, including the transmission of voice, video and data signals and the transfer or shared use of dark fiber strands ("**Powerline Facilities**").

AGREEMENT

NOW, THEREFORE, in consideration of the above-recited premises, the mutual covenants set forth herein, and other good and valuable consideration, the receipt and sufficiency of which are hereby acknowledged, the Parties agree as follows:

1. **Grant of Utility Easements; Purposes**.

1.1. Subject to the terms and conditions stated herein, Grantor hereby grants and conveys to Grantee a perpetual, non-exclusive easement twenty feet in width to accommodate the Powerline Facilities ("**Powerline Facilities Easement**") on, over, and across a portion of "**Grantor's Property**" defined below ("**Powerline Facilities Easement Area**"), only for the "**Authorized Uses**" described in section 1.2, below. To provide flexibility to the Grantee in the final siting of the Powerline Facilities, which will be established in the field at the time of its construction, this Agreement initially is establishing a corridor 30-50 feet in width that follows the existing Galloping Goose Trail and adjacent land south of the trail ("**Easement Corridor**"), as such Easement Corridor is generally depicted on attached **Exhibit "B"**. The Powerline Facilities may only be located within the Easement Corridor. In addition, in order to facilitate the construction and installation of the Powerline Facilities, Grantor hereby grants to Grantee a temporary construction easement ("**Temporary Construction Easement**") with the dimensions and in the locations as generally depicted on Exhibit B. Uses allowed under the Temporary Construction Easement shall include reasonable vehicular and pedestrian access and the use of equipment to, from and within the above-described Temporary Construction Easement, as necessary for the surveying, construction, reconstruction, installation, inspection of the Powerline Facilities. Upon the completion of the construction of the Powerline Facilities, Grantee, at its cost and expense, shall promptly cause an "as built" survey showing the final location of the constructed Powerline Facilities to be prepared, at which time the parties will execute an amendment to this Agreement, confirming the grant of the Easement and limiting the dimensions of the Easement Area to the location indicated on the "as built" survey. The cost and expense of the survey, easement amendment and recordation shall be incurred by Grantee.

1.2. **Authorized Uses**. To survey, construct, reconstruct, install, inspect, maintain, renew, repair, remove, replace, upgrade to meet changing needs, and operate the Powerline Facilities. The Powerline Facilities will be located underground, except that certain modestly sized above ground

elements may be installed from time to time within the Powerline Facilities Easement Areas, which do not interfere with Grantor's use of the Grantor Property or the rights of any other person or party to whom Grantor has authorized usage of the Grantor Property. The foregoing notwithstanding, a portion of the Powerline Facilities will cross an area of the San Miguel River located on the Grantor Property, which Grantee initially intends to install by boring, to the extent practical and feasible, provided, that if boring is not practical, Grantee may need to install only portion of the Powerline Facilities crossing the San Miguel River and the affected portion of the Grantor Property with an above ground line, thereafter, the balance of the Powerline Facilities would be installed underground as contemplated by this Agreement. The area where the crossing of the San Miguel River will occur and boring or overhead Powerline Facilities might be installed is designated as the River Crossing Area on attached **Exhibit "B"**. All cable, conduit, or other electrical or telecommunication or fiber optic facilities installed within the Powerline Facilities Easement Areas shall remain the property of Grantee and shall only be relocated or removed at the sole option of Grantee, provided that at such time as appropriate easements have been secured so as to enable an operator to utilize the fiber optic facilities for commercial or domestic internet purposes, and at such time as Grantor or said operator secure the right to connect to the fiber optic facilities to provide internet services to Lawson Hill businesses and residents, notwithstanding whatever charges may be imposed upon Grantor, or Lawson Hill businesses and residents by said operator, such connection to the fiber optic facilities shall be without charge by Grantee. Grantee shall have a right to enable reasonable vehicular and pedestrian access and the use of equipment to, from and within the above-described Powerline Facilities Easement Areas, as necessary for the surveying, construction, reconstruction, installation, inspection, maintenance, renewal, repair, removal, replacement, upgrading and operation of the Powerline Facilities. Grantee shall secure all required permits and approvals necessary to undertake the work contemplated by the Authorized Uses and shall comply with all applicable laws in undertaking such work.

1.3. The Easements may be used only for the Authorized Uses by Grantee and its designees, including its contractors, retained to undertake the Authorized Uses.

1.4. The Easements are granted subject to those certain agreements, covenants, easements, declarations and other instruments of record affecting the Grantor Property ("**Existing Encumbrances**"). Grantors warrant title to the Powerline Facilities Easement Area, subject to the Existing Encumbrances. The Powerline Facilities Easement Area accommodates other utilities, such as gasline facilities, and a public recreational trail. Grantee is responsible for coordinating the positioning (including any spatial separation), installation and operation of its Powerline Facilities in a manner that safely and properly co-exists with the any and all such other utilities located within the Powerline Facilities Easement Area as well as the public recreational trail. Grantee, at its cost and expense, shall promptly restore the public recreational trail if impacted in the course of the installation or repair of the Powerline Facilities.

1.5. Grantor shall have the right to use the Powerline Facilities Easement Area for any purpose that is not inconsistent with Grantee's exercise of its rights hereunder, it being understood by Grantee that in all events, Grantor shall continue to have the right to use, maintain, repair, replace and/or upgrade the Grantor Property and any improvements thereon from time to time. In any event, Grantor shall not construct any buildings or structures within the Powerline Facilities Easement Area, without the prior consent of Grantee, which shall not be unreasonably withheld.

1.6. Grantee shall in perpetuity: (a) incur all costs associated with Grantee's undertaking of the Authorized Uses; (b) keep, maintain, operate and repair the Powerline Facilities in a good, safe and proper condition, as required from time to time, in accordance with applicable law; (c) resolve in good faith any unintended or unexpected issues that arise from the operation of the Powerline Facilities that disturb and/or alter the respective Grantor's Property; and (d) minimize disturbance to the Grantor Property and promptly repair, restore and otherwise return the respective Grantor's Property to the condition that pre-existed prior to such land disturbing activities at Grantee's cost and expense.

1.7. The Parties recognize and agree that the Grantor is concerned about impacts to trees and other vegetation in this corridor and to the greatest extent possible is directing Grantee not to cut down, remove, disturb or otherwise damage or destroy any trees or vegetation without first securing the consent of the Grantor. In all instances, Grantee will not disturb trees and other vegetation on the Grantor Property, without advance review and approval by Grantor, which Grantor may grant or withhold in its reasonable discretion. Prior to commencing work hereunder, the parties shall meet and confer onsite and determine the best course for the placement of the Powerline Facilities which would result in minimal impact to trees and vegetation within the Easement Area. Trees and vegetation that Grantor has approved for removal shall be flagged and removed by Grantee, provided that if such trees have value for timber or wood, shall be the property of the Grantor, if so elected by Grantor; with all brush or refuse being promptly and properly disposed of by Grantee at Grantee's sole cost and expense. If in the course of performing the work, Grantee determines that other trees and vegetation need to be removed, Grantee shall first contact Grantor and obtain the approval of Grantor to remove such additional trees and vegetation.

2. **Miscellaneous**

2.1. **Covenant Running with the Land; Successors and Assigns**. The Easements, and the benefits, burdens, obligations, and rights associated therewith granted and agreed to herein shall run with the land and shall be a burden upon Grantors' Property. Further, the terms, conditions and provisions of this Agreement shall be binding upon and shall inure to the benefit of and be a burden upon, as appropriate, the designees, successors, and assigns of all of the Parties to this Agreement.

2.2. **Indemnity.** By accepting the Easements granted herein, Grantee, for itself and for its contractors, subcontractors, employees, agents, and representatives, hereby agrees to indemnify, defend and hold harmless the Grantor, including its managers, members, officers, directors, shareholders, agents, representatives and similar related parties, to the full extent allowed under Colorado law, from and against any and all claims, demands, causes of action, damages, losses, liabilities, costs and expenses of any kind or nature, including those involving death, personal injury or property damage, and also including reasonable attorney's fees, arising from or incurred in any way in connection with Grantee's or its contractors', subcontractors', employees', agents', and representatives' undertaking of the Authorized Uses, excepting to the extent any such claims, demands, liabilities or losses arise from any negligent or willful act or omission of the Grantor, its contractors, subcontractors, employees, agents, representatives, laborers and materialmen. This obligation to indemnify shall include the retention of legal counsel, expert witnesses and all other reasonable costs, expenses and liabilities incurred.

2.3. **Governing Law; Remedies; Costs and Expenses**. This Agreement shall be construed under and governed by the laws of Colorado, with jurisdiction and venue restricted to a court of competent jurisdiction in San Miguel County, Colorado. All of the rights and remedies of the Parties under this Agreement including, without limitation, injunctive relief and specific performance, shall be cumulative and shall be binding upon, and inure to the benefit of, each of their respective successors, heirs, and assigns. Time is of the essence to the performance of any undertakings required by this Agreement. In any action to enforce the terms of this Agreement, the prevailing Party shall be awarded reasonable attorney's fees, expert witness fees and costs. Wherever possible, each provision of this Agreement shall be interpreted in such a manner as to be effective and valid under applicable law.

2.4. **Representations**. In entering into this Agreement, the Grantor and Grantee each warrant to the other party that it is a duly qualified and existing entity, capable of doing business in the state of Colorado and that the person(s) executing this Agreement are duly authorized to execute this Agreement and each Party has taken all actions necessary to obtain such authorization and that the terms and conditions of this Agreement constitute an enforceable agreement against such Party.

2.5. **Entire Agreement**. This Agreement contains the entire agreement and

understanding of the Parties with respect to the subject matter hereof and supersedes or replaces all written and oral agreements previously made or existing.

2.6. **Notice.** All notices, demands or writings in this Agreement provided to be given or made or sent that may be given or made or sent by either Party hereto to the other, shall be deemed to have been fully given or made or sent when made in writing and delivered by United States Mail (certified, return receipt requests and postage pre-paid), and addressed to Grantee at the address set forth above, and to Grantor (1) to Grantor's Principal Offices and (2) to Grantor's Registered Agent, as such addresses are on file with the Colorado Secretary of State.

2.7. **Modifications; Waiver**. No amendment, modification or termination of this Agreement or any portion thereof shall be valid or binding unless it is in writing, dated subsequent to the date hereof and signed by each of the Parties hereto. No waiver of any breach, term or condition of this Agreement by any party shall constitute a subsequent waiver of the same or any other breach, term or condition.

2.8. **Recording.** This Agreement shall be recorded in the records of the Office of the Clerk and Recorder of San Miguel County, Colorado.

2.9. **Counterparts; Facsimile Copies**. This Agreement may be executed in counterparts, each of which shall be deemed an original, but all of which together shall constitute one and the same document. Facsimile copies of any party's signature hereon shall be deemed an original for all purposes of this Agreement, and this Agreement may be recorded with such signatures. Both Parties shall initial each page and sign below.

IN WITNESS WHEREOF, the Parties hereto have executed this Agreement, intending it to be effective as of the Effective Date.

GRANTOR:

The Lawson Hill Open Space Land Owners Company, LLC,
a Colorado limited liability company

By: Pamela Hall

Printed Name: PAMELA HALL
Title: MANAGING DIRECTOR-LHPOC

STATE OF Colorado)
) ss.
COUNTY OF San Miguel)

The foregoing instrument was acknowledged before me this 22nd day of June, 2016 by Pamela Hall, as the Managing Director of The Lawson Hill Open Space Land Owners Company, LLC, a Colorado limited liability company.

Witness my hand and official seal.

Anne M Connor
Notary Public

My commission expires: 10/29/18.

ANNE M. CONNOR
NOTARY PUBLIC
STATE OF COLORADO
NOTARY ID #20104042840
My Commission Expires October 29, 2018

GRANTEE:

San Miguel Power Association, Inc.,
a Colorado nonprofit corporation

By: Jeremy Fox

Printed Name: JEREMY FOX
Title: PLANNING SUPERVISOR

STATE OF Colorado)
) ss.
COUNTY OF Ouray)

The foregoing instrument was acknowledged before me this 8th day of June, 2016 by Jeremy Fox, as the Planning Supervisor of San Miguel Power Association, Inc., a Colorado nonprofit corporation.

Witness my hand and official seal.

Duane A. Deveny
Notary Public

My commission expires: 01-08-2020.

DUANE A DEVENY
NOTARY PUBLIC
STATE OF COLORADO
NOTARY ID # 20164000797
MY COMMISSION EXPIRES 01-08-2020

EXHIBIT A

Tract 509B, Lawson Hill P.U.D., Phase 15, according to the Plat recorded October 14, 2005 in Plat Book 1 at page 3545,

AND

TRACT 503A LAWSON HILL PUD PHASE 15 ACC TO PL BK 1 PG 3545 THRU 3555 REC 10 14 2005 AT RECEPT 378712 AND LAND USE RESOLUTION REC 10 14 2005 AT RECEPT 378697 LAWSON HILL IS A COMMON INTEREST COMMUNITY IN WHICH EVERY OWNER HAS AN EQUAL INTEREST IN THE COMMON ELEMENTS

COUNTY OF SAN MIGUEL
STATE OF COLORADO

Exhibit B

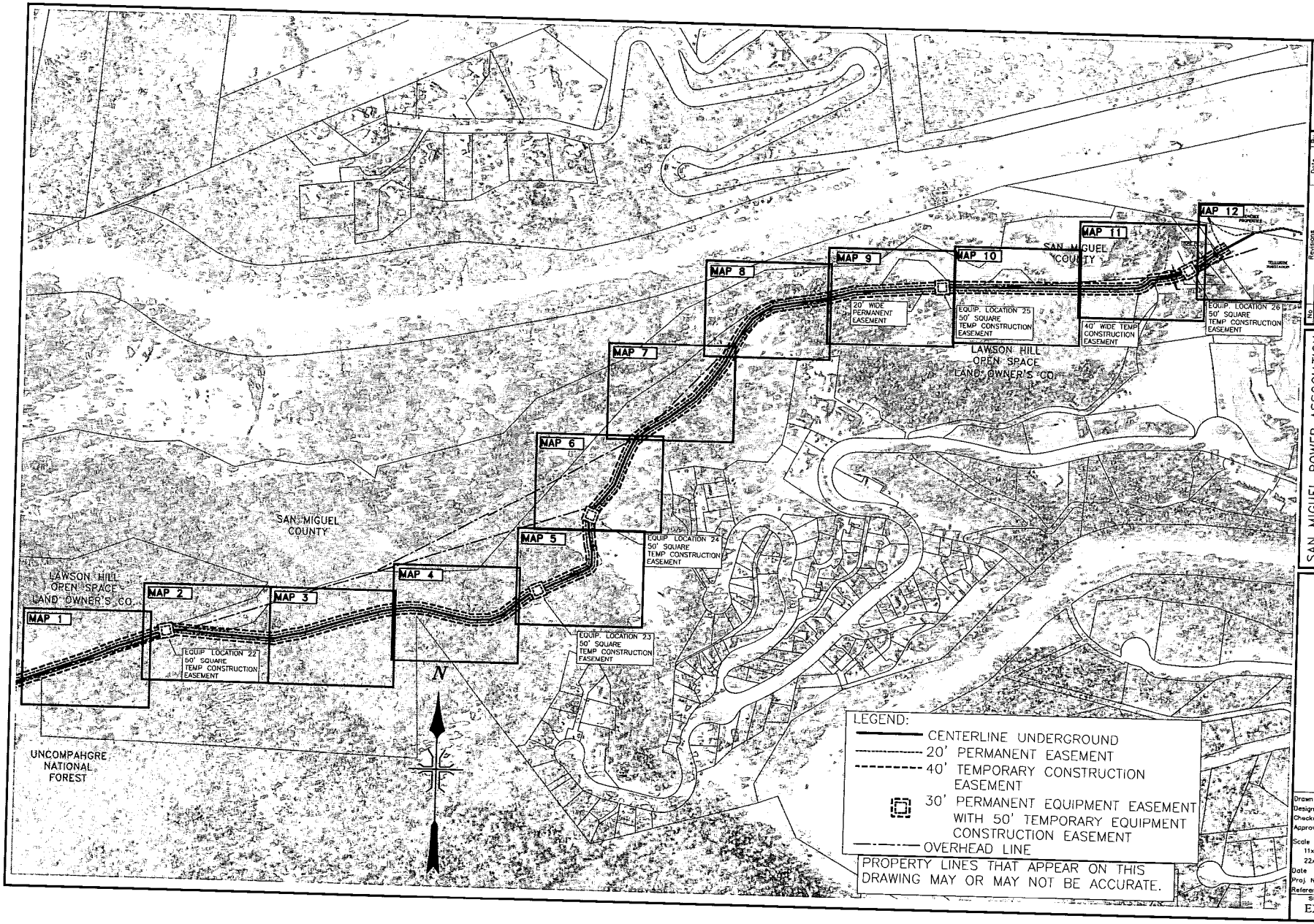

No.	Revisions	Date	By
1	ISSUE FOR EASEMENT	05-31-16	DHR

SAN MIGUEL POWER ASSOCIATION
TELLURIDE RELIABILITY PROJECT
UNDERGROUND DISTRIBUTION LINE EASEMENT

Exponential Engineering Company
202 W North Street
Cortez, Colorado 81321
Phone (970) 564-9261
Fax (970) 564-1420

Drawn	NRB
Designed	WEM
Checked	DHR
Approved	DHR
Scale 11x17	NTS
22x34	NTS
Date	03-18-16
Proj. No.	SMPA-1401
Reference	
Sheet No	EXHIBIT B

EASEMENT FOR UNDERGROUND POWER LINE AND RELATED FACILITIES

This is a conveyance of an easement for an underground power line and related facilities from the individual(s), corporation(s), partnership(s), or other entity(ies), named below as **GRANTOR** to **SAN MIGUEL POWER ASSOCIATION, INC.**, a Colorado Corporation (**SMPA**) whose address is P.O. Box 817, Nucla, Co. 81424.

The **GRANTOR** hereby sells and conveys to **SMPA** an easement, described below, and **GRANTOR** warrants the title to the easement as hereinafter provided.

GRANTOR: The Hackett Family Partnership, LLLP, a Colorado Registered Limited Liability Limited Partnership

LOCATION AND DESCRIPTION OF EASEMENT: An easement being 20' feet in width, the centerline of which is an electric line as constructed under work order No. 43906, the approximate location of which is depicted on the attached Exhibit "A" across the following described property located in San Miguel County, Colorado: Sections 7, Township 42 North, Range 9 West, N.M.P.M.

RIGHTS AND TERMS GRANTED:

1. The right to construct, reconstruct, replace, remove, maintain, upgrade to meet changing needs, and use an underground electrical distribution line and related electrical facilities, and facilities, equipment and systems used or useable for the transmission or provision of commercial telecommunications and fiber optic services (including the transmission of voice, video and data signals and the transfer or shared use of dark fiber strands), with the right to inspect, alter, repair, maintain, upgrade, and remove the same in whole or in part at any time, within the above-described easement area.

2. The right of reasonable access to and from the above-described easement area, over and across the adjoining land of **GRANTORS,** by means of existing roads, if any, or otherwise by such route or routes as will minimize any damage or inconvenience to **GRANTOR.** Such right of access shall include the right to install, maintain and use gates in any fences which now cross or shall hereafter cross the above-described easement area.

3. All cable, conduit, or other electrical or telecommunication or fiber optic facilities installed within the easement area shall remain the property of **SMPA** and shall only be relocated or removed at the sole option of **SMPA.**

4. The consideration for the grant of easement is one and no/100 dollars ($1.00), and other good and valuable consideration, the receipt and sufficiency of which is hereby acknowledged by **GRANTOR.**

5. GRANTOR shall have the right to use the described easement area for any purpose that is not inconsistent with **SMPA's** enjoyment of the rights granted herein, provided that such uses by **GRANTOR** shall not interfere with or endanger any of the facilities within the easement area or use thereof by **SMPA**. **GRANTOR** shall not construct any buildings or structures, or impound any water within or upon the easement area, or drill or operate any well within the easement area. **GRANTOR** shall not make use of the easement area in any manner that would violate any applicable code or regulation.

6. SMPA shall, at its cost and expense, make reasonable efforts to repair any damage that **SMPA** may cause to **GRANTOR's** property in the exercise of its rights hereunder.

7. This easement and its terms shall run with the land and shall be binding upon and inure to the benefit of the parties hereto, their heirs, successors and assigns.

8. The individual signing on behalf of **GRANTOR** hereby represents and warrants that he/she is properly authorized and empowered to execute this instrument on behalf of **GRANTOR**. **GRANTOR** covenants with **SMPA** that **GRANTOR** is lawfully seised in fee simple of the above-described property and easement area, that said property and easement area is free from all encumbrances and that **GRANTOR** will forever warrant and defend all of the easement so granted to **SMPA**, against every person claiming any interest in the easement area or any part thereof.

Executed by **GRANTOR**(s) on the 19th day of August, 20 16.

The Hackett Family Partnership, LLLP, a Colorado Registered Limited Liability Limited Partnership

by Robert D Hackett — Robert D. Hackett General Partner
Signature — Printed Name and Title

by Nancy L. Hackett — Nancy L. Hackett, General Partner
Signature — Printed Name and Title

STATE OF Colorado)
) ss.
COUNTY OF Mesa)

The foregoing instrument was acknowledged before me this 19th day of August, 20 16.

by* Robert D. Hackett, General Partner

by* Nancy L. Hackett, General Partner

*(*name individual Grantor(s) or if Grantor is Corporation, Partnership or other entity, then identify signers as authorized signatory of the entity)*

My commission expires 1/8/2019 (SEAL)

Notary Public Nita Gomez

NITA GOMEZ
NOTARY PUBLIC
STATE OF COLORADO
NOTARY ID #20024040460
My Commission Expires January 8, 2019

EXHIBIT "A"

EXHIBIT "A" attached to and made a part of that certain San Miguel Power Association, Inc. Easement for Underground Power Line and Related Facilities dated _____ , 2016, by and The Hackett Family Partnership, LLLP, a Colorado Registered Limited Liability Limited Partnership, Grantor, and San Miguel Power Association, Inc., a Colorado corporation, Grantee, granting an easement being 20' feet in width, the centerline of which is an electric line as constructed, the approximate location of which is as depicted below, across the following described property located in **San Miguel** County, Colorado:

Township 42 N, Range 9 W, N.M.P.M.
Sections 7

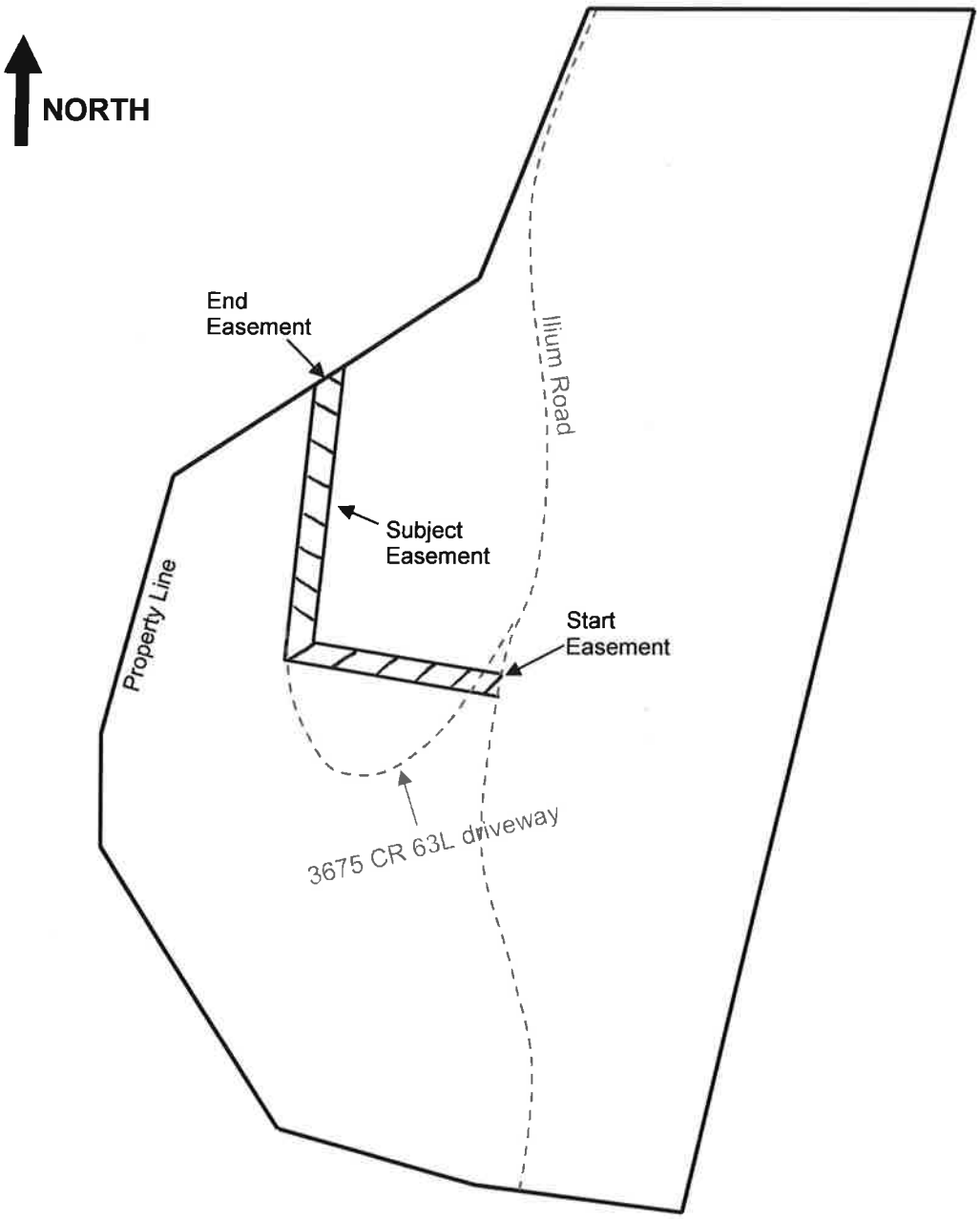

EASEMENT FOR UNDERGROUND POWER LINE AND RELATED FACILITIES

This is a conveyance of an easement for an underground power line and related facilities from the individual(s), corporation(s), partnership(s), or other entity(ies), named below as **GRANTOR** to **SAN MIGUEL POWER ASSOCIATION, INC.**, a Colorado Corporation (**SMPA**) whose address is P.O. Box 817, Nucla, Co. 81424.

The **GRANTOR** hereby sells and conveys to **SMPA** an easement, described below, and **GRANTOR** warrants the title to the easement as hereinafter provided.

GRANTOR: Kammer Family Trust

LOCATION AND DESCRIPTION OF EASEMENT: An easement being 20' feet in width, the centerline of which is an electric line as constructed under work order No. 43906, the approximate location of which is depicted on the attached Exhibit "A" across the following described property located in San Miguel County, Colorado: Sections 7, Township 42 North, Range 9 West, N.M.P.M.

RIGHTS AND TERMS GRANTED:

1. The right to construct, reconstruct, replace, remove, maintain, upgrade to meet changing needs, and use an underground electrical distribution line and related electrical facilities, and facilities, equipment and systems used or useable for the transmission or provision of commercial telecommunications and fiber optic services (including the transmission of voice, video and data signals and the transfer or shared use of dark fiber strands), with the right to inspect, alter, repair, maintain, upgrade, and remove the same in whole or in part at any time, within the above-described easement area.

2. The right of reasonable access to and from the above-described easement area, over and across the adjoining land of **GRANTORS,** by means of existing roads, if any, or otherwise by such route or routes as will minimize any damage or inconvenience to **GRANTOR.** Such right of access shall include the right to install, maintain and use gates in any fences which now cross or shall hereafter cross the above-described easement area.

3. All cable, conduit, or other electrical or telecommunication or fiber optic facilities installed within the easement area shall remain the property of **SMPA** and shall only be relocated or removed at the sole option of **SMPA.**

4. The consideration for the grant of easement is one and no/100 dollars ($1.00), and other good and valuable consideration, the receipt and sufficiency of which is hereby acknowledged by **GRANTOR.**

5. GRANTOR shall have the right to use the described easement area for any purpose that is not inconsistent with **SMPA's** enjoyment of the rights granted herein, provided that such uses by **GRANTOR** shall not interfere with or endanger any of the facilities within the easement area or use thereof by **SMPA**. **GRANTOR** shall not construct any buildings or structures, or impound any water within or upon the easement area, or drill or operate any well within the easement area. **GRANTOR** shall not make use of the easement area in any manner that would violate any applicable code or regulation.

6. SMPA shall, at its cost and expense, make reasonable efforts to repair any damage that **SMPA** may cause to **GRANTOR's** property in the exercise of its rights hereunder.

7. This easement and its terms shall run with the land and shall be binding upon and inure to the benefit of the parties hereto, their heirs, successors and assigns.

8. The individual signing on behalf of **GRANTOR** hereby represents and warrants that he/she is properly authorized and empowered to execute this instrument on behalf of **GRANTOR**. **GRANTOR** covenants with **SMPA** that **GRANTOR** is lawfully seised in fee simple of the above-described property and easement area, that said property and easement area is free from all encumbrances and that **GRANTOR** will forever warrant and defend all of the easement so granted to **SMPA**, against every person claiming any interest in the easement area or any part thereof.

Executed by **GRANTOR**(s) on the 4th day of November, 20 16.

Kammer Family Trust

by Carol H. Kammer — Carol H. Kammer, Trustee
Signature — Printed Name and Title

by Robert B. Kammer — ROBERT B. KAMMER Trustee
Signature — Printed Name and Title

STATE OF Colorado)
) ss.
COUNTY OF San Miguel)

The foregoing instrument was acknowledged before me this 4th day of November, 20 16.

by * Carol H. Kammer

by* Robert B. Kammer

*(*name individual Grantor(s) or if Grantor is Corporation, Partnership or other entity, then identify signers as authorized signatory of the entity)*

My commission expires 10-27-2018 (SEAL)

Notary Public

VALERIE L. YINDRA
NOTARY PUBLIC
STATE OF COLORADO
NOTARY ID 19984023399
MY COMMISSION EXPIRES OCTOBER 27, 2018

EXHIBIT "A"

EXHIBIT "A" attached to and made a part of that certain San Miguel Power Association, Inc. Easement for Underground Power Line and Related Facilities dated Nov 4, 2016, 2016, by and Kammer Family Trust, Grantor, and San Miguel Power Association, Inc., a Colorado corporation, Grantee, granting an easement being 20' feet in width, the centerline of which is an electric line as constructed, the approximate location of which is as depicted below, across the following described property located in **San Miguel** County, Colorado:

Township 42 N, Range 9 W, N.M.P.M.
Sections 7

NORTH

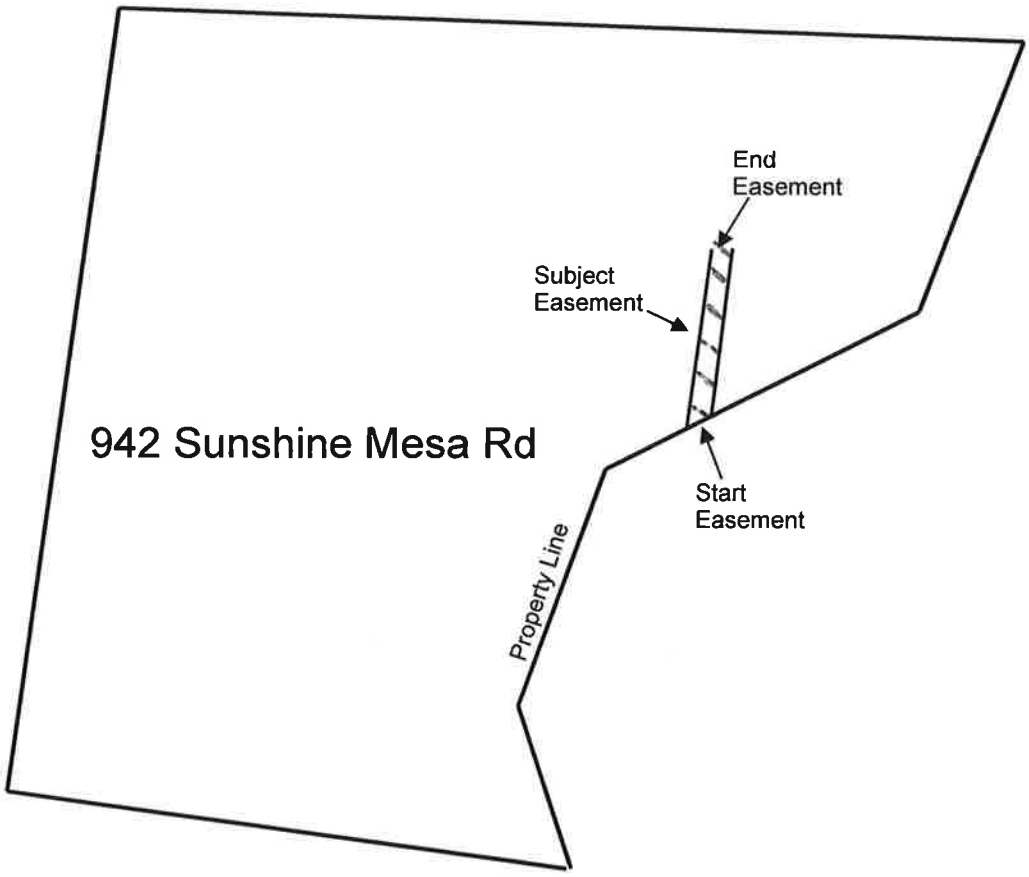

TEMPORARY EASEMENT FOR CONSTRUCTION OF ELECTRIC DISTRIBUTION FACILITIES AND AGREEMENT TO GRANT PERMANENT EASEMENT

This grant of a temporary non-exclusive easement for the construction of electric distribution facilities and agreement to grant a permanent easement is made and entered into this 30 day of March, 2016, by and between **SAN MIGUEL COUNTY, COLORADO, a body corporate and politic, acting by and through its Board of County Commissioners, P.O. Box 1170, Telluride, CO 81435,** as **Grantor** and **San Miguel Power Association, Inc.**, whose address is P.O. Box 817, Nucla, Co. 81424, **SMPA,** as **Grantee.** This grant of a temporary non-exclusive easement is for the construction of electrical distribution facilities, and related items, as described below, and includes an agreement to grant a mutually agreeable permanent easement for those facilities and related items contingent upon the successful completion of construction to the satisfaction of the Grantor and Grantee.

1. GRANT OF TEMPORARY EASEMENT. The **Grantor** hereby grants and conveys to **SMPA** a temporary non-exclusive easement for construction, maintenance and operation of facilities generally described below in the location generally described below.

a. **Grantor** : San Miguel County, Colorado, a body corporate and politic, acting by and through its Board of County Commissioners.

b. General Description of Facilities: This temporary non-exclusive construction easement is to allow for setting up and operation of a bore machine on west side of the San Miguel River in order to attempt to successfully install 2 - 8" HDPE & 1- 4" HDPE crossings under the San Miguel River. Should the Grantee determine the boring under the San Miguel River to have been successful it shall promptly notify Grantor in writing at the address stated herein and the Grantee shall proceed with the installation of a power vault and fiber vault to be installed during the completion of the primary underground portion of the Telluride Reliability Project. Upon completion of the primary underground portion of the Telluride Reliability Project the Grantee shall promptly reclaim, restore and revegetate any and all areas of the project that have been disturbed during the project's construction, to the Grantor's reasonable satisfaction. Any such revegatation activities shall be performed using only native grasses and plants acceptable to Grantor.

c. General Location: Legal Description: TRACT 503 LAWSON HILL PUD PHASE 9 ACC TO LOT LINE ADJ REC 09 26 2006 AT PL BK 1 PG 3735-3743 AND ACC TO PL BK 1 PG 1891-1900 REC 07 14 95 AND ACC TO PL BK 1 PG 2105-2110 REC 09 11 96 AND ACC TO PL BK 1 PG 3158 REC 07 11 2003 DENSITY TRANFER BK1 PG 3734; as recorded in reception R408489; located in San Miguel County, CO

d. Rights Granted by Temporary Easement. This temporary non-exclusive construction easement shall grant all of the rights described on Exhibit "A", (permanent easement form) attached hereto and shall remain in effect until the described facilities have been constructed and surveyed, or otherwise described, and **Grantor** conveys a permanent easement for such facilities.

2. AGREEMENT TO GRANT PERMANENT EASEMENT. The parties agree as follows:

a. Survey. Upon satisfactory completion of the facilities described above, the facility shall be surveyed by a Colorado Licensed Surveyor, unless other means of easement description are agreed to by both **Grantor** and **SMPA**, and a legal description developed from that survey shall be provided by **SMPA** to the Grantor within 30 days of the survey's completion. The cost of the survey shall be borne by _____SMPA_____.

At **SMPA's** option, the survey and legal description may be provided by **SMPA's** staff, provided such employee is a Colorado Licensed Surveyor.

b. Grant of Permanent Easement. Within thirty (30) days after the legal description is provided to **SMPA**, **SMPA** shall complete the Grant of Permanent Easement, using such legal description, and within such thirty (30) days Grantor shall execute the Grant of Permanent Easement, conveying a permanent easement for the facilities to Grantee. The temporary easement, granted above, shall remain in force and effect until the permanent easement has been granted.

3. CONSIDERATION. The consideration for the temporary easement, the agreement to grant permanent and the grant of the permanent easement is One and no/100 Dollars ($1.00), receipt of which is hereby acknowledged by **Grantor**.

4. REPAIR OF DAMAGE. Grantee shall, upon completion of construction, make all reasonable efforts to repair any damage it has done to Grantor's land by construction activities by Grantee or its contractors of the described facilities. Should Grantee determine that the boring beneath the San Miguel River authorized by this Temporary Easement has not been successful it shall promptly proceed to reclaim, restore, and revegetate the disturbed easement area using native plants and grasses acceptable to Grantor, and return such disturbed area to the condition that existed prior to grant of the Temporary Easement. Such site reclamation, restoration, and revegetation work shall be completed to Grantor's reasonable satisfaction within 30 days of Grantee's determination that such boring operations have not been successful.

The foregoing easement was executed by **GRANTOR** on March 30, 2016

By Joan May for San Miguel County - BOCC

STATE OF Colorado)
) ss.
COUNTY OF San Miguel)

The foregoing instrument was acknowledged before me, Terry R. Adams, a notary public, this 30th day of March, 2016,
by* Joan May, as Chair, San Miguel Board of County Commissioners.

(*name individual Grantor(s) or if Grantor is Corporation, Partnership or other entity, then identify signers as authorized signatory of the entity)

Witness my hand and official seal. My commission expires 3/12/2017.

Notary Public Terry R. Adams (SEAL)

TERRY R. ADAMS
NOTARY PUBLIC
STATE OF COLORADO
NOTARY ID 19974003106
MY COMMISSION EXPIRES MARCH 12, 2017

ACCEPTANCE BY SMPA

SMPA accepts the terms of this Easement.

By Jeremy Fox on 3/31, 2016

As Service Planning Supervisor

For **SAN MIGUEL POWER ASSOCIATION, INC.,** a Colorado Corporation

COUNTYOWNEDPROPERTY\SMPA SMR TEMP ESMT 031816 redline

SAN MIGUEL COUNTY
PLANNING DEPARTMENT

P.O. Box 548, 333 West Colorado Avenue, 3rd Floor, Telluride, CO 81435
Phone (970) 728-3083 Fax (970) 728-3098
email: miker@sanmiguelcountyco.gov or karenh@sanmiguelcountyco.gov

June 30, 2016

Brad Zaporski
San Miguel Power Association
P.O. Box 817
Nucla, CO 81424

Re: Development Permit/Wetland Permit Approval for Sunshine to Telluride Reliability Project, Bore under the San Miguel River – Permit DEV-6-16-2644

Dear Brad,

This correspondence shall serve as Development Permit and Wetland Permit Administrative Approval to allow San Miguel Power Association to bore under the San Miguel River on Tract 503 and Tract 503A, Lawson Hill PUD for construction of an electric distribution line based upon information submitted in your May 6, 2016 application.

This approval is conditioned upon compliance with the Temporary Easement for Construction, which includes the revegetation and weed control conditions, between SMPA and San Miguel County, the Easement for Power Line and Related Facilities with the Lawson Hill Open Space Land Owners Company. All ground disturbances should be limited to within 10 feet of the boring area.

If the ability to bore under the river is unsuccessful the applicant is required to reapply to the County for approval of any change in the river crossing process.

Sincerely,

Michael Rozycki
Planning Director

pc: Stephni Balzly, Reliabel Power Consultants
Jeremy Fox, SMPA
E. William Riley, SMPA
Steven Zwick, County Attorney

[text/word/DEV-6-16-2644.letter]

San M□□□el Po□er □□□o□at□on □□M□ □el□a□l□t□ Pro□e□t Sta□n□ □rea Pro□□□on□

San M□□□el Po□er □□□o□at□on (SMP□) □□ll □e □on□tr□□t□n□ the □ell□r□de□Mo□nta□n □lla□e-rel□a□l□t□ □ro□e□t □n 2017. SMP□□□ □eneral □ontra□tor □□ll □e □ee□n□te□ □orar□ □ta□n□ area□ □or a□□o□ □odat□n□ the □on□tr□□t□on o□the □□M□ □el□a□l□t□ Pro□e□t. SMP□ □□ll □ele□t the□ □eneral □ontra□tor □n earl□ 2017 a□ter e□al□at□n□ □ro□e□t □□d□. □h□□ □ro□e□t □n□l□de□the □n□tallat□on o□a □ □lt□□ond□□t□d□□t □an□tren□h and □o□erl□ne □a□le □n□tallat□ alon□ □ll□□□ □□ (625 □□) and the □allo□n□ □oo□e tra□l.

□he □eneral □ontra□tor □□ll □□e the□e te□ □orar□ □ta□n□ area□ □or □on□tr□□t□on o□erat□on□. SMP□ ex□e□t□ the □eneral □ontra□tor to arran□e □or and lea□e an□ □ta□n□ area□ □or the □ro□e□t. □he □ontra□tor □□ll l□□el□atte□□t to □on□r□ □ □lt□□le □ta□n□ area□ to a□l□tate □on□tr□□t□on on th□□5 □ □le lon□ □ro□e□t. □he □ze and □ha□e o□□ta□n□ area□□ a□□ar□a□lon□ a□the □ta□n□ area□□an a□□o□ □odate e□er□th□n□ the □ontra□tor re□□re□ to □□ld the □ro□e□t. □he □ta□n□ area□□o□ld ran□e □n □ze □ro□ a□□□ all a□□ a□re □□ to □o□□□l□a 3-5 a□re □n □ze. □he□e □ta□n□ area□□o□ld □e □□ed □or □ □lt□□le □□e□ to □n□l□de:

- Pla□n□a te□ □orar□o□□□e and□or □tora□e tra□ler. □ □ta□n□ area □o□ld □e the □te □here □ontra□tor e□ □lo□ee□ □ □□ter □e□ore and a□ter □or□.
- Stor□n□ □on□tr□□t□on □a□h□ner□needed □or ex□a□at□on□a□□□ll, and □a□le □□ll□n□ □ro□e□□e□.
- Stora□e o□□□□ndle□o□□ond□□t.
- Stora□e o□reel□o□□o□er □a□le□.
- Stora□e o□ex□a□at□on □□o□l□ to □n□l□de d□□t, ro□□, a□□halt □r□nd□n□□, and □ra□el.
- Stora□e o□□tor□ □ater □ontrol □ater□al□ to □n□l□de □a□r□□□en□e, and □tra□ □addle□.

SMP□ doe□ not ant□□□ate the □ontra□tor need□n□ □t□l□t□e□ (ele□tr□□ □hone, □ater) and the □ontra□tor □□ll l□□el□ □la□e □orta-□ohn□at the□e area□ (a□ needed). Co□ □en□at□on □or □□e o□the te□ □orar□area□ □□ll □e ne□ot□ated □et□een the □ontra□tor and the a□□e□ted lando□ner(□). □□□□all□, the□e a□ree□ent□ □o□ld re□□re the □ontra□tor to □o □letel□ re□tore the te□ □orar□ □tora□e area□ to the □□ner□□ □at□□a□t□on. □he □□ner □an atte□□t to ne□ot□ate other □ro□ert□ □□ □ro□e□ent□□the□e t□□□all□ □n□l□de □or□that □an □e done □□□n□ the □ontra□tor□□ □en and e□□□□ent on □te.

Potential stockpile location 1 - Lawson Hill HOA
Greenfields Ln
San Miguel River Dr
Society Dr
145

County Road 63L
Edgewater Rd
Short Ct
Two Rivers Dr
Potential stockpile location 2 - Alexander Trust/ Telluride Gravel

Potential stockpile location3 - STEMZ/ SMCO
Sunshine Mesa Rd
County Road 63L

Potential Stockpile location 4 - Cordillera Corp
County Road 63L
Sunshine Mesa Rd

Department of the Army

Pre-Construction Notification for Telluride-Mtn. Village Reliability Project

Action ID: TBD
Applicant(s): San Miguel Power Association
Project Name: Telluride-Mtn. Village Reliability Project

December 2016

TABLE OF CONTENTS

1. Introduction 1

1.1 Applicant 1

1.2 Authorized Agent 1

1.3 Project Location 2

1.4 Easement Holder 2

2. Proposed Project 3

2.1 Purpose and Need 3

2.2 Project Description 3

2.2.1 Construction Schedule 5

2.3 General Construction Sequence 5

2.4 Alternatives Considered but Eliminated 5

3. Jurisdictional Aquatic Resources 7

4. Impacts 10

4.1 Temporary Impacts 10

4.1.1 Temporary Impacts to Waters of the U.S. 11

4.1.2 Temporary Impacts to Waters of San Miguel County 13

4.2 Type and Quantity of Fill Material in Waters of the U.S. 15

4.3 Avoidance and Minimization Measures 15

5. Other Regulatory Requirements 17

5.1 Threatened and Endangered Species 17

5.2 Historic Properties and Cultural Resources 18

5.3 Other Permits/Regulatory Compliance 19

6. References 20

Attachment A – Project Maps A-1

Attachment B – Aquatic Resources Delineation Report B-1

Attachment C – Cultural Survey Report C-1

Attachment D – United States Forest Service Special Use Permit D-1

LIST OF TABLES

Table 1. USACE-jurisdictional aquatic resources identified within the survey area 7

Table 2. San Miguel County jurisdictional aquatic resources identified within the survey area.... 9

Table 3. Temporary Impacts to USACE-jurisdictional aquatic resources..... 10

Table 4. Temporary Impacts to waters of San Miguel County..... 11

Table 5. Type and Quantity of Fill Material 15

Table 6. Summary of Avoidance and Mitigation Measures 16

Table 7. Determination of Effects on Federally Listed Species 17

LIST OF FIGURES

Figure 1. Trench diagram..... 4

LIST OF MAPS

Map A-1. Vicinity Map..... A-2

Map A-2. Project Area Aquatic Resources Map A-3

Map A-3. Skunk Creek Impacts Map A-4

Map A-4. Intermittent Creek #2 Impacts Map..... A-5

Map A-5. Galloping Goose Trail Riparian Shrubland Impacts Map..... A-6

ACRONYMS

APE	Area of Potential Effect
BMP	best management practice
CDPHE	Colorado Department of Public Health and Environment
Ecosphere	Ecosphere Environmental Services, Inc.
kV	kilovolt
NWP	Nationwide Permit
OHWM	Ordinary High Water Mark
PCN	Pre-Construction Notification
Project	Telluride Reliability Project
ROW	right-of-way
SEAS	Stratified Environmental & Archaeological Services, LLC
SMPA	San Miguel Power Association, Inc.
SWMP	Stormwater Management Plan
Tri-State	Tri-State Generation and Transmission Association, Inc.
USACE	U.S. Army Corps of Engineers
USFS	U.S. Forest Service
WUS	waters of the United States

1. INTRODUCTION

This report serves as the Pre-Construction Notification (PCN) to the U.S. Army Corps of Engineers (USACE) for construction activities associated with the proposed Telluride Reliability Project (Project) in San Miguel County, Colorado. The San Miguel Power Association, Inc. (SMPA) requests authorization under Nationwide Permit (NWP) 12—Utility Line Crossings—for anticipated impacts to jurisdictional wetlands and other waters of the U.S. (WUS) (e.g., streams) associated with the Project.

SMPA and Tri-State Generation and Transmission Association, Inc. (Tri-State) propose the construction of the Project, which will improve reliability of the existing electric system serving the Telluride and Mountain Village communities and other rural customers in the region. The project includes construction of the following:

- Two underground distribution express circuits
- Fiber optic cable between SMPA's Sunshine substation and SMPA's Telluride substation
- Replacement of the majority of the existing overhead down valley distribution circuit with a new underground circuit co-located in the same trench with the two new express circuits
- Replacement of existing overhead customer services along Ilium Road
- Removal of the existing overhead distribution power line

1.1 Applicant

Jeremy Fox
Service Planning Supervisor
San Miguel Power Association
P.O. Box 1150
720 N. Railroad St.
Ridgway, CO 81432
Office: (970) 626-5549 ext. 202
Email: jeremy@smpa.com

1.2 Authorized Agent

Sandy Friedley
Wetland Scientist
Ecosphere Environmental Services, Inc.
776 E. 2nd Avenue
Durango, CO 81301
Office: (970) 382-7256
Email: friedley@ecosphere-services.com

1.3 Project Location

Legal Description

The legal description of the Project is Sections 31 and 32, Township 43 North, Range 9 West and Sections 6, 7, 18, and 19 of Township 42 North, Range 9 West, New Mexico Principal Meridian

Name of waterbody

The Project parallels the San Miguel River and the South Fork of the San Miguel within the San Miguel watershed (14030003).

Coordinates in degree decimal NAD 83

36.777°N, -108.434°W (centroid of Project area)

Driving Directions

The Project is located in San Miguel County on the Gray Head, Colorado, 7.5-minute United States Geological Survey quadrangle (Map A-1). The Sunshine substation is located just east of San Miguel County Road 63L (also known as Ilium Road), near the Ames Power Plant. The Telluride substation is located west of Telluride adjacent to Telluride's waste water treatment plant, near Society Turn (Map A-2).

1.4 Easement Holder

San Miguel Power Association
P.O. Box 1150
720 N. Railroad St.
Ridgway, CO 81432

2. PROPOSED PROJECT

2.1 Purpose and Need

The Telluride area has grown from a small mountain community with a modest ski area into the Towns of Telluride and Mountain Village known for its destination ski resort in the winter and an extensive festival schedule in the summer. Accordingly, the electric loads in the area have grown significantly. SMPA has made additions and modifications to the electric system over the years to provide the necessary capacity to serve the increased demand for electricity.

A recent upgrade of the transmission system in the area provided looped (redundant) transmission feeds to the Sunshine substation but permit restrictions left the Telluride substation on a radial transmission line with limited backup. Providing a redundant or backup feed to the Telluride substation is a high priority for Tri-State and SMPA and will allow them to reliably serve the towns of Telluride, Mountain Village and the associated ski resort. The redundant system will alleviate power outages, such as a recent 2-day outage experienced by these communities.

2.2 Project Description

The Project will utilize existing conduits near the Sunshine substation (previously installed by SMPA) and include excavation and installation of new conduits in a duct bank (i.e. a series of conduits) between the two substations (approximately 4.6 miles of new conduit). The proposed underground duct bank will include all conduits needed for two dedicated express circuits, a Down Valley circuit, a conduit for telecommunications (fiber optic) and spare conduits. New distribution cables will be pulled through the conduits and terminated at the Sunshine and Telluride substations, which have room to accept the new dedicated circuits. Neither substation will be expanded beyond existing substation boundaries. Splice points for the dedicated circuits typically will be in concrete, subsurface vaults. The Down Valley distribution circuit will utilize surface-mounted cabinets to facilitate operations and maintenance necessary for providing service to members along this line.

In addition, a multi-strand fiber optic cable will be installed between Sunshine and Telluride substations in the proposed duct bank. Tri-State and SMPA will use some of the fiber strands for internal utility communications. Such communications include remote monitoring of substation and distribution equipment and dedicated phones for communications back to SMPA and Tri-State dispatch centers for utility workers monitoring these substations. The cable will include additional spare fibers, which could be used for commercial purposes as part of the regional efforts to improve broadband service.

The existing overhead Down Valley circuit is currently underbuilt on the Tri-State overhead 115 kilovolt (kV) transmission line. This underbuilt distribution line will be removed and replaced

with the new underground Down Valley circuit and service existing consumers along Ilium Road. The underbuilt circuit will be removed, including all conductors, cross-arms, and hardware associated with the underbuild. The Tri-State 115 kV transmission line will not be modified.

Trench Construction

The trench for the new conduit will be 5.5-feet deep and 2-feet wide and include up to 12 conduits for distribution lines and fiber optic cable (Figure 1). Concrete will be used to cover the conduit and ensure proper spacing. All construction will occur within a 20-foot right-of-way (ROW).

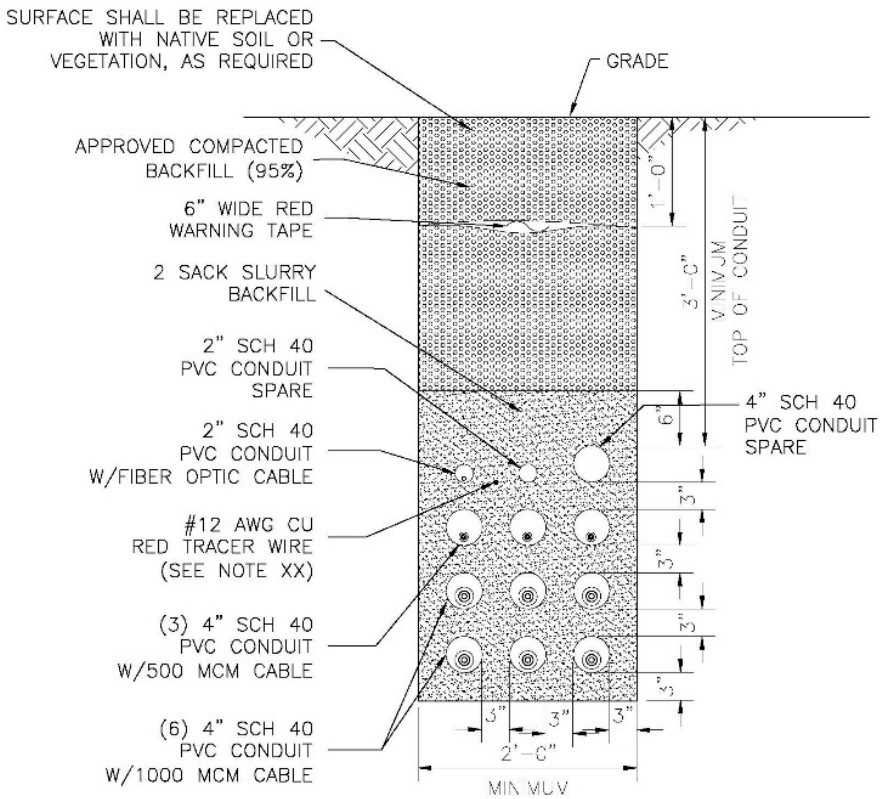

Figure 1. Trench diagram

During construction of the trench, topsoil will be salvaged from the trench and windrowed along the edge of the ROW. The trench spoil (i.e., subsoil) will be windrowed adjacent to the topsoil. During backfill, the trench spoil will be placed in the trench first, followed by the topsoil. Excess spoil will not be spread out over topsoil, but removed from the Project area and disposed of in an upland location.

2.2.1 Construction Schedule

SMPA will put the project out for bid by the end of the year (2016) with construction beginning as soon as the Telluride Ski Resort closes in 2017. Construction will be completed by October 2017.

2.3 General Construction Sequence

Prior to any ground-disturbing activities, vegetation clearing and grubbing will occur within the 20-foot ROW for the trench. Clearing will be limited only to what is needed for trench excavation and ancillary construction and will be minimal given that the trench follows Ilium Road and the Galloping Goose Trail, or previously disturbed areas for the majority of its length.

Construction equipment will include excavators, backhoes, skid steer loaders, cement trucks, dump trucks, service, fuel, and maintenance trucks, compactors, wire reel trailers, utility trucks, forklifts, graders (roads), front-end loaders, and tractor-trailers.

The work sequence will generally occur as follows. However, some tasks may be performed concurrently, or their order changed to maintain efficient use of contractor resources and meet Project schedule needs.

- Mobilization/demobilization of equipment.
- Staging/stockpiling of materials and equipment used for construction.
- Installation of Stormwater best management practices (BMPs) in accordance with the Stormwater Management Plan (SWMP) prior to ground-disturbing activities. Maintenance and inspections will occur according to the Colorado Department of Public Health and Environment's (CDPHE) Construction Stormwater Permit regulations.
- Clearing and grubbing of trees and shrubs within the 20-foot ROW, where necessary.
- Excavation of the trench and installation of the conduit.
- Concrete placement to maintain proper spacing for the conduit. Backfilling with appropriate fill.
- Restoring the trench line to pre-existing contours.
- Reclaim trench line and all other areas disturbed during construction with suitable native backfill and topsoil. Prepare ground surface for seeding and mulching. Seed with the seed mix approved by San Miguel County and the U.S. Forest Service (USFS).

2.4 Alternatives Considered but Eliminated

Several alternate routes were considered.

Route 1 - An alternative route through Mountain Village was considered but eliminated because it would have required more new disturbance.
Route 2 – OH following the proposed Ilium road/Galloping Goose route was eliminated due to San Miguel County restrictions on new overhead construction.
Route 3 – following Highway 145 was eliminated due to a very busy corridor that did not provide enough space to add the new facilities.
No action was also eliminated due to the need to provide a redundant source of electricity to the service area.

3. JURISDICTIONAL AQUATIC RESOURCES

Aquatic resources considered jurisdictional by the USACE in the Project area include wetlands, streams, and a spring. Ecosphere Environmental Services, Inc. (Ecosphere) conducted a pedestrian survey of 5.6 miles of proposed underground electric line within a 50-foot buffer for a total survey area of 33.8 acres (Map A-2). The proposed electric line is located in the South Fork of the San Miguel River and the San Miguel River valley bottoms. The Aquatic Resources Delineation Report is included as Attachment B.

Overall, twelve streams and one spring were delineated, including the San Miguel River, South Fork of the San Miguel River, seven perennial creeks, two intermittent creeks, one ephemeral creek, and the Ilium Road Spring. A total of 1,422 linear feet and 0.31 acre of other WUS were delineated in the survey area. Fringe wetlands were delineated along the edge of the San Miguel River at the proposed river crossing that totaled 0.02 acre. Table 1 includes USACE jurisdictional aquatic resources and WUS delineated within the Project area.

Table 1. USACE-jurisdictional aquatic resources identified within the survey area

Name	NWI Classification[1]	Latitude[2]	Longitude[2]	Length (Feet)	Area (Acres)
San Miguel River	R3UB	37.948	-107.877	128	0.101
San Miguel River Fringe Wetlands	PEM	37.948	-107.877	N/A	0.023
South Fork of the San Miguel River	R3UB	37.915	-107.902	132	0.086
Perennial Channel #1	R3UB	37.949	-107.877	92	0.006
Skunk Creek	R3UB	37.945	-107.885	82	0.030
Vance Creek	R3UB	37.926	-107.900	48	0.005
Ephemeral Stream	R4SB	37.925	-107.900	82	0.004
Turkey Creek	R3UB	37.914	-107.901	72	0.017
Ilium Road Spring	R3UB	37.913	-107.901	9	0.001
Intermittent Creek #1	R4SB	37.905	-107.906	199	0.023
Intermittent Creek #2	R4SB	37.900	-107.907	110	0.005
Perennial Channel #3	R3UB	37.895	-107.906	70	0.003
Perennial Channel #4	R3UB	37.890	-107.905	398	0.026
			TOTAL	**1,422**	**0.330**

[1] R3UB – upper perennial, unconsolidated bottom; R4SB – intermittent, streambed; PEM – palustrine, emergent; R4SB – intermittent/ephemeral, streambed (Cowardin et al. 1979).

[2] North American Datum 83, decimal degrees.

Table 2. lists the wetland crossings by Township, Range, Section and Parcel number.

Table 2. Township, Range, Section and Parcel Number of USACE-jurisdictional aquatic resources

Name	Township, Range, Section	San Miguel Parcel Number(s)
San Miguel River	Township 43 N, Range 9 W, Section 32	456532200601, 456532201001
San Miguel River Fringe Wetlands	Township 43 N, Range 9 W, Section 32	456532200601, 456532201001
South Fork of the San Miguel River	Township 42 N, Range 9 W, Section 7	477918200032
Perennial Channel #1	Township 43 N, Range 9 W, Section 32	456532200601, 456532116001, 456532201001
Skunk Creek	Township 43 N, Range 9 W, Section 32	456532200603
Vance Creek	Township 42 N, Range 9 W, Section 6	477906400006
Ephemeral Stream	Township 42 N, Range 9 W, Section 6	477906400006
Turkey Creek	Township 42 N, Range 9 W, Section 7	477907300031
Ilium Road Spring	Township 42 N, Range 9 W, Section 7	477907300031
Intermittent Creek #1	Township 42 N, Range 9 W, Section 18	Open Space
Intermittent Creek #2	Township 42 N, Range 9 W, Section 18	USFS
Perennial Channel #3	Township 42 N, Range 9 W, Section 18	USFS
Perennial Channel #4	Township 42 N, Range 9 W, Section 19	USFS

Ecosphere delineated three San Miguel County wetland areas within the Project area for a total of 0.78 acre (Map A-2). This included a riparian shrubland along the San Miguel River, a roadside ditch dominated by coyote willow (*Salix exigua*), and a wetland fringe along a perennial creek that did not exhibit hydric soils or wetland hydrology. Table 3 includes San Miguel County jurisdictional wetlands and WUS delineated within the Project area.

Table 3. San Miguel County jurisdictional aquatic resources identified within the survey area

Name	NWI Classification[1]	Latitude[2]	Longitude[2]	Area (Acres)
Galloping Goose Trail Riparian Shrubland	PSS	37.948	-107.877	0.740
Coyote Willow Roadside Ditch	PSS	37.949	-107.877	0.014
Perennial Creek #4 Fringe Wetland	PEM	37.890	-107.905	0.023
			TOTAL	**0.777**

[1] PEM – palustrine, emergent; PSS – palustrine, scrub-shrub (Cowardin et al. 1979).

[2] North American Datum 83, decimal degrees.

Table 4. Township, Range, Section and Parcel Number of San Miguel County jurisdictional aquatic resources within the survey area

Name	Township, Range, Section	San Miguel Parcel Number(s)
Galloping Goose Trail Riparian Shrubland	Township 43 N, Range 9 W, Section 32	456532200603, 456532201001
Coyote Willow Roadside Ditch	Township 42 N, Range 9 W, Section 18	USFS
Perennial Creek #4 Fringe Wetland	Township 42 N, Range 9 W, Section 19	USFS

4. IMPACTS

4.1 Temporary Impacts

Temporary impacts to USACE-jurisdictional aquatic resources are expected from construction of the proposed Project (Table 3). No permanent impacts are anticipated. Temporary impacts to USACE-jurisdictional aquatic resources include open trenching through Skunk Creek and an intermittent creek (Table 3). The other USACE-jurisdictional aquatic resources will be avoided either by horizontal directional drilling or by trenching within Ilium Road under existing culverts. Two San Miguel County jurisdictional wetlands will be avoided during construction. Fringe habitat of a riparian shrubland adjacent to the Galloping Goose Trail is within Project construction limits (Table 4).

Table 5. Temporary Impacts to USACE-jurisdictional aquatic resources

Name	Latitude[1]	Longitude[1]	Temporary Impact (Acre)	Crossing Method
San Miguel River	37.948	-107.877	0	Horizontal directional drill
San Miguel River Fringe Wetlands	37.948	-107.877	0	Horizontal directional drill
South Fork of the San Miguel River	37.915	-107.902	0	Horizontal directional drill
Perennial Channel #1	37.949	-107.877	0	Horizontal directional drill
Skunk Creek	37.945	-107.885	0.006	Open trench
Vance Creek	37.926	-107.900	0	Open trench in existing road, under existing culvert
Ephemeral Stream	37.925	-107.900	0	Feature is outside of the pipeline right-of-way
Turkey Creek	37.914	-107.901	0	Open trench in existing road, under existing culvert
Ilium Road Spring	37.913	-107.901	0	Open trench in existing road, under existing culvert
Intermittent Creek #1	37.905	-107.906	0	Open trench in existing road, under existing culvert
Intermittent Creek #2	37.900	-107.907	0.001	Open trench
Perennial Channel #3	37.895	-107.906	0	Open trench in existing road, under existing culvert
Perennial Channel #4	37.890	-107.905	0	Utilize existing conduit
TOTAL TEMPORARY IMPACT			**0.007**	

[1] North American Datum 83, decimal degrees

Table 6. Temporary Impacts to waters of San Miguel County

Name	Latitude[1]	Longitude[1]	Temporary Impact (Linear feet)	Activity Within 100-foot buffer?	Description of Activity
Galloping Goose Trail Riparian Shrubland	37.948	-107.877	155	Yes	Vegetation removal
Coyote Willow Roadside Ditch	37.949	-107.877	0	Yes	Pipeline will be in existing road adjacent to the willow patch
Perennial Creek #4 Fringe Wetland	37.890	-107.905	0	No	SMPA will utilize existing conduit
TOTAL TEMPORARY IMPACT			**155**		

[1] North American Datum 83, decimal degrees

4.1.1 Temporary Impacts to Waters of the U.S.

SMPA will avoid impacts to the San Miguel River and the South Fork of the San Miguel River by horizontal directional drilling below the river bed. The bore setup areas will be located in upland areas outside of the river and any adjacent wetland areas.

The majority of the trench will be located within the roadbed of Ilium Road, and not within the adjacent vegetation community. SMPA will avoid six USACE-jurisdictional WUS and Ilium Road Spring by staying in an existing roadbed and excavating underneath existing culverts that convey flow across the road. By using this technique, no impacts are expected to six WUS and Ilium Spring (Table 3). An Aquatic Resources Excel spreadsheet is included in Attachment B.

Skunk Creek

SMPA will need to open trench through Skunk Creek along the Galloping Goose Trail due to steep side slopes adjacent to the creek (Map A-3), causing a total temporary impact of 0.006 acre (Table 3). The trench will be 2-feet wide and cross the creek upstream of the Galloping Goose Trail bridge (Photo 1) and will require a construction ROW that is 20 feet wide. The Ordinary High Water Mark (OHWM) of Skunk Creek is 12-feet wide at the proposed crossing location. SMPA will access the creek from either side and will not require any equipment to operate within the OHWM. A concrete pump will deliver concrete to the trench. Concrete washout will not occur within 100 feet of Skunk Creek. SMPA will backfill the creek to pre-existing contours.

Photo 1. Skunk Creek and Galloping Goose Trail Bridge

Prior to construction, SMPA will install a stream diversion structure to divert surface water around the construction area. Depending on the season of construction and streamflow within Skunk Creek, SMPA will either utilize a culvert flume to bypass the trench area or construct a barrier upstream and pump the water around the trench.

SMPA requires a dry trench in order to lay the conduit and pour the concrete. However, SMPA anticipates groundwater will be encountered during construction. SMPA will acquire a Construction Dewatering Permit from the CDPHE prior to construction and develop a dewatering system that adheres to all CDPHE requirements. A dewatering system may include discharging groundwater back to Skunk Creek, which will require water sampling as stipulated in the CDPHE dewatering permit. Other options may include a discharge to ground without any connection to a surface water or hauling groundwater off-site and disposal at a local wastewater treatment plant.

Intermittent Creek #2

SMPA will also trench through an intermittent creek along Ilium Road (Table 3). The OHWM of the creek is 2-feet wide at the crossing location (Photo 2). With a 20-foot ROW, SMPA will temporarily impact 0.001 acre within the OHWM of the intermittent creek (Map A-4). SMPA will time construction when the creek bed is dry and when the weather forecast is dry. SMPA will restore the drainage to pre-existing conditions.

Photo 2. Intermittent Creek #2

4.1.2 Temporary Impacts to Waters of San Miguel County

SMPA will avoid two waters of San Miguel County within the Project area (Table 4). This includes fringe wetland habitat to a perennial creek where the existing conduit was previously installed under a separate San Miguel County Wetland Permit. The other avoidance area includes a coyote willow shrubland located in the roadside ditch to Ilium Road (Photo 3). This area will be avoided because SMPA would trench within Ilium Road. The trench would be within 10 feet of the shrubland, but SMPA would not impact any willows during construction.

Photo 3. Roadside Ditch Coyote Willow Stand

Galloping Goose Trail Riparian Shrubland

SMPA would trench within the raised bed of the Galloping Goose Trail west of the Telluride Substation (Map A-5). The ROW in this reach would be restricted to the trail width of 12 feet. Construction activities will avoid a USACE-jurisdictional wetland located south of this section of trail, and the San Miguel River—located another 25 to 50 feet to the north. A riparian shrubland, considered a water of San Miguel County, extends from the toe of the raised bed and up the slopes to the trail (Photo 4). The new conduit would be installed along the north edge of the trail because there is a natural gas pipeline on the south edge. SMPA would need to trim willows and other riparian shrubs along up to 155 feet of the north side of the trail (Map A-5). No work would be done on the slopes of the raised bed.

These shrubs are actively managed every year with evidence of prior pruning to maintain the full width of the Galloping Goose Trail. If SMPA needs to excavate any shrubs, SMPA would trim the shrubs within 6 inches of the ground and excavate the entire root ball. The root ball would be replanted once the conduit is installed and backfilled.

Photo 4. Galloping Goose Trail and Adjacent Riparian Shrubland

4.2 Type and Quantity of Fill Material in Waters of the U.S.

SMPA would fill the bottom 2 feet of the trench through Skunk Creek and the intermittent creek with concrete to maintain proper spacing for the conduit. The trench is 2 feet wide at each crossing, totaling 1.8 cubic yards of concrete for Skunk Creek and 0.3 cubic yard of concrete for the intermittent creek (Table 5).

Table 7. Type and Quantity of Fill Material

Fill Type	Quantity
Concrete	2.1 cubic yards

4.3 Avoidance and Minimization Measures

Table 6 lists avoidance and minimization measures that have been considered during engineering design as environmental commitments to be adhered to by the applicant—and by extension the contractor—during and after construction.

Table 8. Summary of Avoidance and Mitigation Measures

General Project Avoidance and Minimization
Impacts to riparian vegetation will be minimized, except where removal is necessary for completion of the work.
Work will be confined within the right-of-way to preserve existing vegetation and private property. The right-of-way will be clearly marked in the field.
Spoil piles will not be placed or stored within the stream channel.
Erosion and Sediment Control
SMPA will develop a SWMP and obtain a Construction General Permit from the CDPHE under Section 402 of the Clean Water Act. This will cover stormwater discharges from the Project.
Stormwater structural BMPs will be installed and maintained in accordance with the SWMP prior to clearing and grubbing and ground-disturbing activities. Inspections will occur according to the CDPHE's regulations.
Water Quality Protection
Fuel, oil, hydraulic fluid, lubricants, and other petrochemicals will not be stored within 200 feet of the river and will have a secondary containment system to prevent spills. Appropriate spill clean-up materials, such as booms and absorbent pads, will be available on-site at all times during construction.
All construction equipment will be decontaminated by cleaning with high-pressure water before mobilization to the site. All wheels, tracks, undercarriages, fenders, blades, buckets, and the exterior body will be cleaned prior to entering the site to prevent releases into the aquatic environment and the spread of noxious weeds.
Leaks that occur to equipment while working on the Project will not be allowed to continue operating until the leak is fixed. Refueling will occur a minimum of 100 feet from jurisdictional features.
Concrete clean-up operations will utilize a dedicated concrete wash-out pit in an upland location. The concrete remnants in the wash-out pit will be fully removed and legally disposed of off-site upon completion of all concrete operations, or as needed for maintenance.
Heavy equipment will not be parked within jurisdictional features.
A construction dewatering permit will be obtained from CDPHE by SMPA prior to construction. Dewatering operations would adhere to the guidelines and recommendations of the CDPHE.
Site Reclamation
After all disturbed areas are reclaimed and the seed bed prepared, revegetation will include a seed mix approved by the USFS and San Miguel County. Certified weed-free mulch—grass hay or straw mulch—will be applied.

Note: SMPA = San Miguel Power Association, Inc.; SWMP = Stormwater Management Plan; CDPHE = Colorado Department of Public Health and Environment; BMP = best management practices; USFS = U.S. Forest Service.

5. OTHER REGULATORY REQUIREMENTS

5.1 Threatened and Endangered Species

According to the United States Fish and Wildlife Service IPaC-Information, Planning, and Conservation System, eight federally listed threatened or endangered and proposed threatened species have the potential to occur in the Project area. The Project area does not provide potential habitat for any of these listed species (Table 7).

Table 9. Determination of Effects on Federally Listed Species

Species	Status	Preliminary Determination of Effect	Rationale
Canada lynx (*Lynx canadensis*)	Threatened	No effect	The proposed Project area does not contain high-elevation forested habitat and is not considered suitable habitat for Canada lynx.
North American wolverine (*Gulo gulo*)	Proposed threatened	No effect	The proposed Project area does not contain high-elevation forested habitat and is not considered suitable habitat for North American wolverine.
Yellow-billed cuckoo (*Coccyzus americanus*)	Threatened	No effect	There are no cottonwoods (*Populus* spp.) or other deciduous trees within the Project area to offer suitable habitat for yellow-billed cuckoo.
Mexican spotted owl (*Strix occidentalis lucida*)	Threatened	No effect	The proposed Project area does not contain caves, cliffs, or steep-walled canyons.
Bonytail chub (*Gila elegans*)	Endangered	No effect	The proposed Project would bore the San Miguel River and the South Fork of the San Miguel River and not impact any fish habitat downstream.

Species	Status	Preliminary Determination of Effect	Rationale
Colorado pikeminnow (*Ptychocheilus lucius*)	Endangered	No effect	The proposed Project would bore the San Miguel River and the South Fork of the San Miguel River and not impact any fish habitat downstream.
Humpback chub (*Gila cypha*)	Endangered	No effect	The proposed Project would bore the San Miguel River and the South Fork of the San Miguel River and not impact any fish habitat downstream.
Razorback sucker (*Xyrauchen texanus*)	Endangered	No effect	The proposed Project would bore the San Miguel River and the South Fork of the San Miguel River and not impact any fish habitat downstream.

5.2 Historic Properties and Cultural Resources

The cultural resource inventory was performed to comply with Section 106 of the National Historic Preservation Act (P.L. 59-209) at the request of the USACE. A pedestrian inventory was conducted by Stratified Environmental & Archaeological Services, LLC (SEAS). SEAS surveyed an Area of Potential Effect (APE) that included the 20-wide easement. The area of APE and the total area surveyed is approximately 7.69 acres

Approximately 2.4 miles of the proposed conduit is located on USFS lands. Approximately 0.45 miles has been constructed. The remaining 1.95 miles of the proposed conduit is located on USFS land. The USFS archaeologist, Brian Haas, cleared the line of any impacts to cultural impacts on USFS lands when the Special Use Permit was issued on August 24, 2016 (included as Attachment D).

The cultural resource inventory for SMPA's proposed Project encountered and documented two newly recorded segments (5SM 2030.35 and 5SM 2030.36) of the Rio Grande Southern Railroad (5SM 2030). Both of the segments date from 1890 to 1952, when the railroad was abandoned. As a whole, site 5SM 2030 is considered an NRHP-eligible linear cultural property under Criteria A & B, as previously and officially determined in 1993. Both site segments 5SM 2030.35 and 5SM 2030.36 are considered non-contributing to the NRHP eligibility as they lack sufficient integrity. In terms of management recommendations, no further cultural resource work is recommended at site segments 5SM 2030.35 and 5SM 2030.36. Therefore, cultural resource clearance for the

Project to proceed is recommended as no significant or potentially significant cultural properties will be affected.

No cultural remains were identified during the pedestrian inventory. Archaeological clearance for the proposed project to proceed was recommended by SEAS. The cultural resource inventory report and associated GIS files are included in Attachment C).

5.3 Other Permits/Regulatory Compliance

SMPA will develop a SWMP and obtain a Construction General Permit from the CDPHE under Section 402 of the Clean Water Act. This will cover stormwater discharges from the project.

SMPA will obtain a Construction Dewatering Permit from the CDPHE for any groundwater dewatering activities for the Skunk Creek crossing and any other dewatering activities required. SMPA will follow all BMP recommendations and the water sampling protocol required by the permit.

SMPA obtained a Special Use Permit by the USFS to construct the proposed project across USFS-managed lands. The USFS issued the Special Use Permit on August 24, 2016 and it is included as Attachment D.

6. REFERENCES

Cowardin, L. M., V. Carter, F. C. Golet, and E. T. LaRoe. 1979. Classification of wetlands and deepwater habitats of the United States. U.S. Fish and Wildlife Service, Office of Biological Services, Washington, D.C. FWS/OBS-79/31.

Attachment A – Project Maps

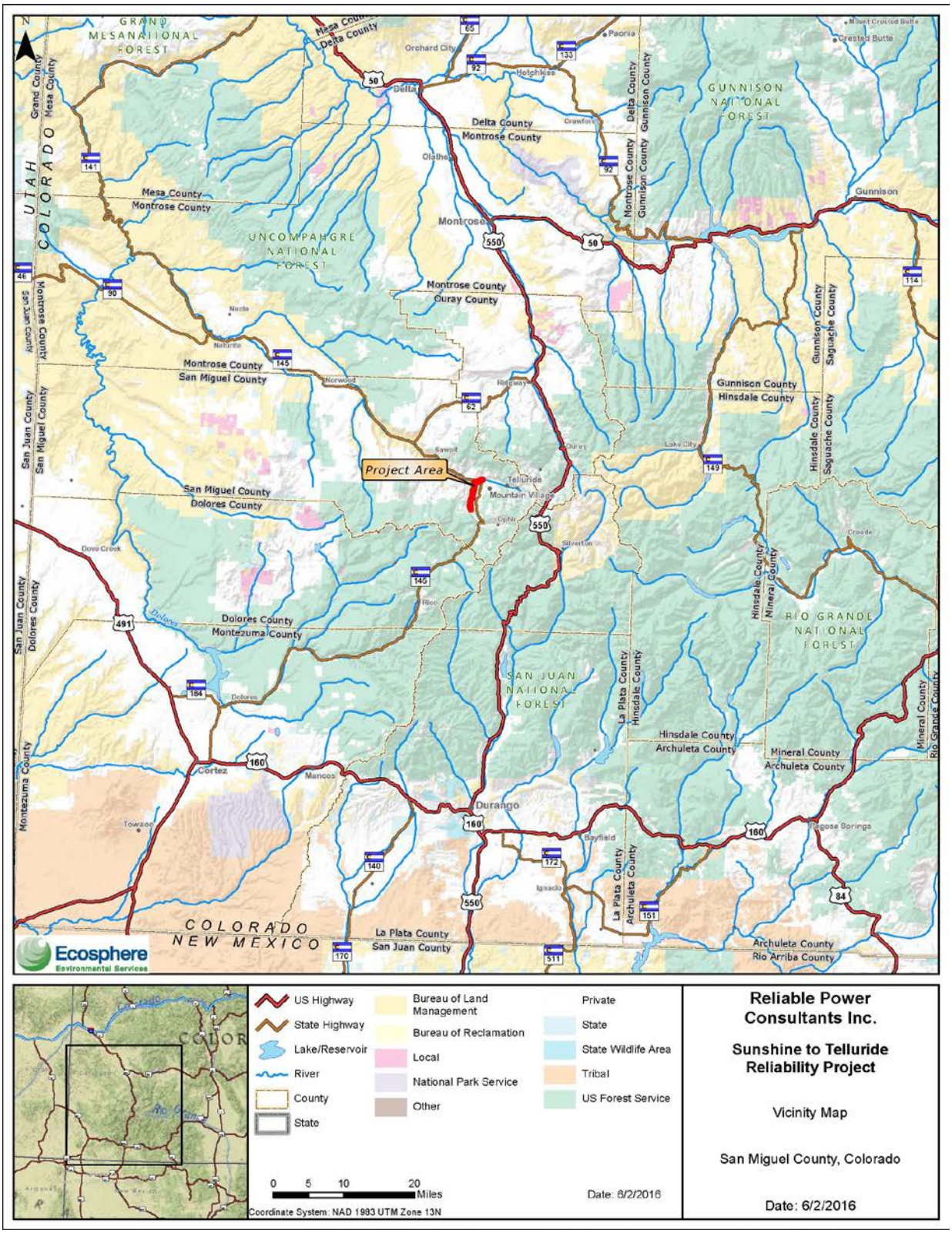

Map A-1. Vicinity Map

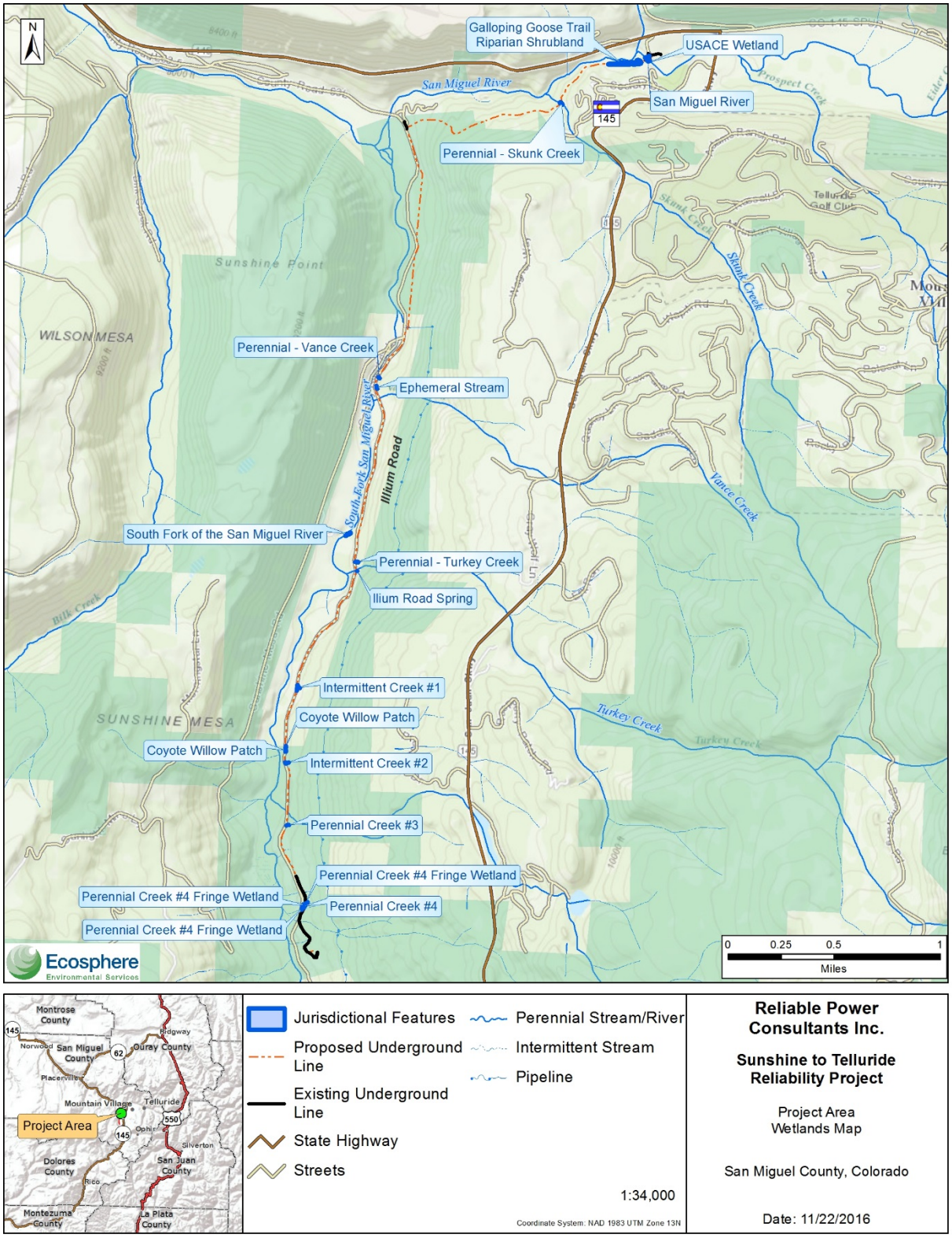

Map A-2. Project Area Aquatic Resources Map

Map A-3. Skunk Creek Impacts Map

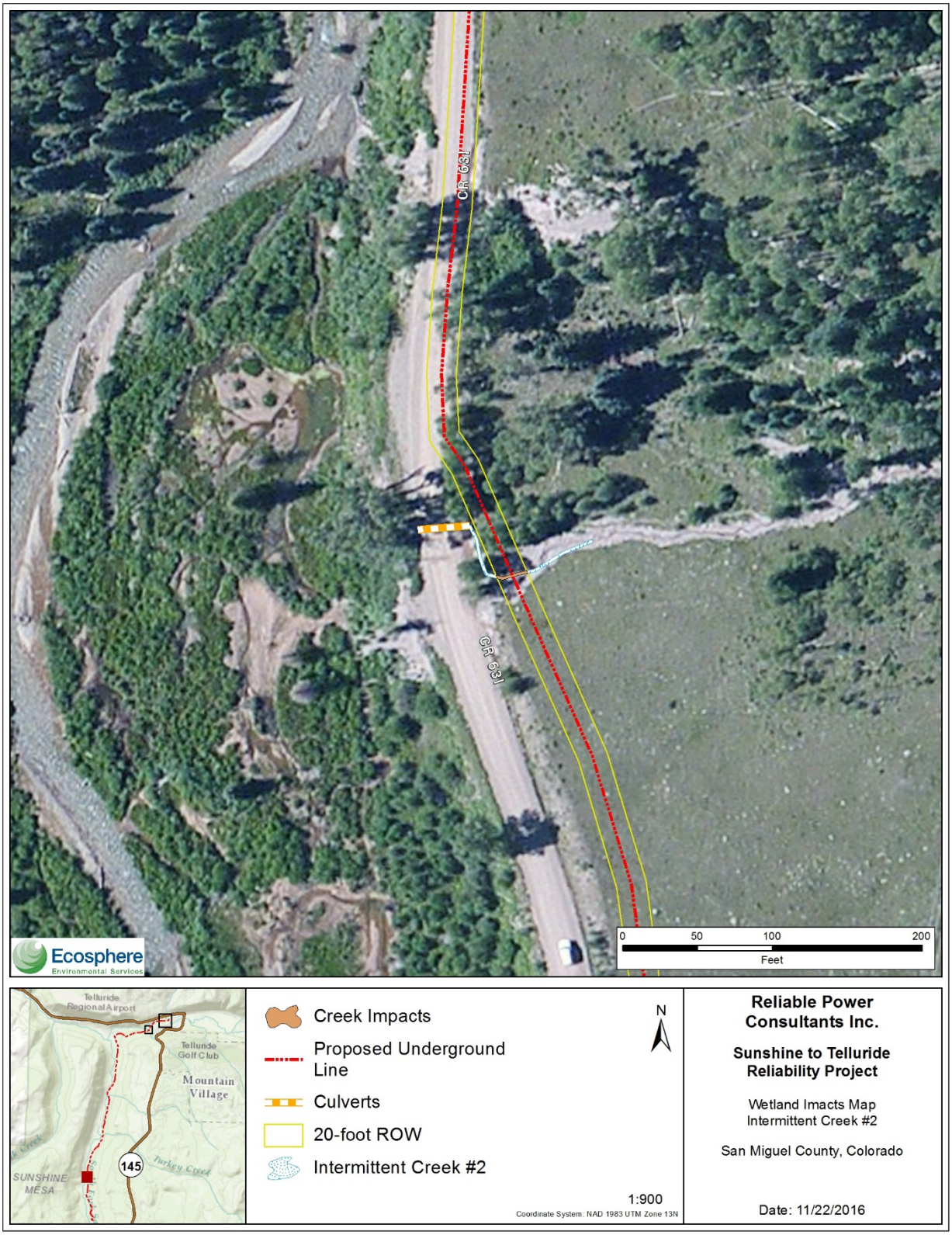

Map A-4. Intermittent Creek #2 Impacts Map

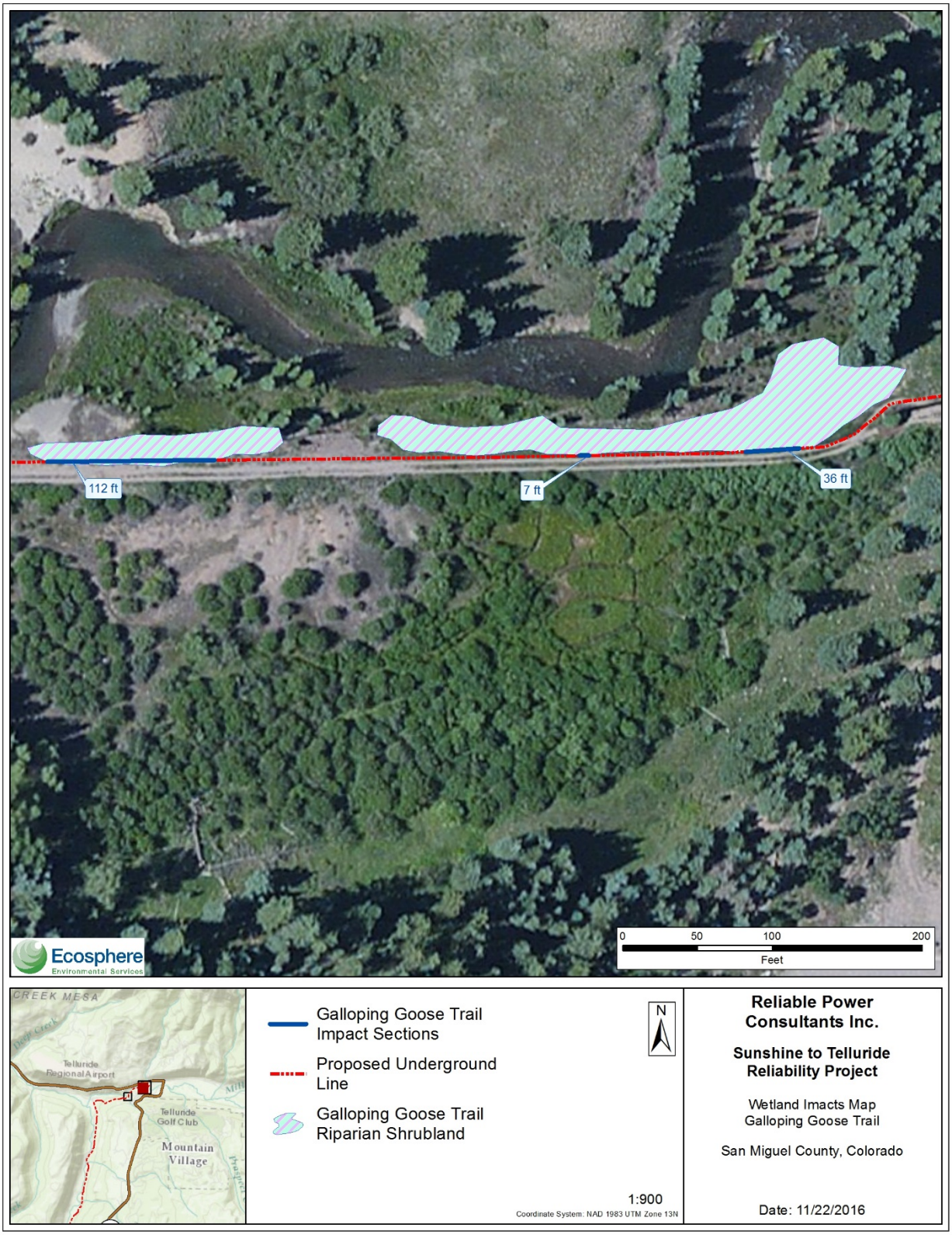

Map A-5. Galloping Goose Trail Riparian Shrubland Impacts Map

Attachment B – Aquatic Resources Delineation Report

Attachment C – Cultural Survey Report

Attachment D – United States Forest Service Special Use Permit

June 2016

Telluride Reliability Project
Aquatic Resources Delineation Report

Prepared for:
Reliable Power
190 Turner Drive, Unit E
Durango, CO 81303
(970) 903-3696

Prepared by:
Ecosphere Environmental Services, Inc.
776 E. Second Avenue
Durango, CO 81301
(970) 382-7256

Ecosphere Environmental Services

Durango, CO
Pagosa Springs, CO
Santa Fe, NM
Farmington, NM

This page intentionally left blank.

Executive Summary

Wetlands in the project area were delineated using guidance provided in the *Corps of Engineers Wetlands Delineation Manual* (USACE 1987) and the *Regional Supplement to the Corps of Engineers Wetland Delineation Manual for the Western Mountains, Valleys, and Coast Region* (USACE 2010). Any perennial, intermittent, or ephemeral water features were delineated using United States Army Corps of Engineers' Regulatory Guidance Letter No. 05-05, Ordinary High Water Mark Identification and *A Field Guide to the Identification of the Ordinary High Water Mark (OHWM) in the Arid West Region* (USACE 2008). In addition, any area that met the San Miguel County, Colorado wetland definition was delineated (San Miguel County 2014).

Overall, Ecosphere conducted a pedestrian survey of 5.6 miles of proposed underground electric line within a 50-foot buffer for a total survey area of 33.8 acres. The proposed electric line followed the South Fork of the San Miguel River and the San Miguel River valley bottoms. Overall, 11 other waters of the U.S. were delineated including the San Miguel River, seven other perennial creeks, two intermittent creeks, and one ephemeral channel. A total of 1,270 feet and 0.22 acre of other waters of the U.S. were delineated. Fringe wetlands were delineated along the edge of the San Miguel River at the proposed river crossing that totaled 0.02 acre.

Ecosphere delineated three San Miguel County wetland areas for a total of 0.78 acre. This included a riparian shrubland along the San Miguel River, a roadside ditch dominated by coyote willow (*Salix exigua*), and a wetland fringe along a perennial creek that did not exhibit hydric soils or wetland hydrology.

Table of Contents

Executive Summary ..... **i**
1. Introduction **1**
1.1 Project Description 1
1.2 Site Location and Directions 1
Contact Information 2
2. Methodology **3**
2.1 Pre-Field Desktop Evaluations 3
2.2 Field Evaluations 3
2.2.1 Wetlands 3
2.2.2 San Miguel Regulated Wetlands 5
2.2.3 Ordinary High Water Mark 5
3. Existing Conditions **7**
3.1 Current Land Uses, Modifications, and Topography 7
3.2 Vegetation 7
3.3 Soils 8
3.4 Hydrology 8
4. Aquatic Resources **9**
4.1 San Miguel River 10
4.2 Skunk Creek 10
4.3 Ilium Road Drainages 11
4.4 Ilium Road Spring 11
4.5 San Miguel County Wetlands 11
4.5.1 Galloping Goose Trail Riparian Shrubland 11
4.5.2 Coyote Willow Roadside Ditch 12
4.5.3 Perennial Creek #4 Fringe Wetland 12
5. Discussion **13**
6. References **14**
Appendix A – Aquatic Resource Delineation Maps **A-1**

Appendix B – Supporting Maps **B-1**
Appendix C – Wetland Determination Forms **C-1**
Appendix D – Photographs **D-1**
Appendix E – Plants Observed **E-1**
Appendix F – Aquatic Resources Excel Spreadsheet **F-1**

List of Tables

Table 3-1. USDA Soil Types in the Project Area 8

Table 4-1. Delineated USACE Jurisdictional Aquatic Resources Identified Within the Survey Area 9

Table 4-2. Delineated San Miguel County Jurisdictional Aquatic Resources Identified Within the Survey Area ... 10

Appendix Table E-1. Plants Observed During Survey E-2

List of Figures

Figure A-1. Aquatic Resources Delineation Map (1 of 8) A-2

Figure A-2. Aquatic Resources Delineation Map (2 of 8) A-3

Figure A-3. Aquatic Resources Delineation Map (3 of 8) A-4

Figure A-4. Aquatic Resources Delineation Map (4 of 8) A-5

Figure A-5. Aquatic Resources Delineation Map (5 of 8) A-6

Figure A-6. Aquatic Resources Delineation Map (6 of 8) A-7

Figure A-7. Aquatic Resources Delineation Map (7 of 8) A-8

Figure A-8. Aquatic Resources Delineation Map (8 of 8) A-9

Figure B-1. Vicinity Map B-2

Figure B-2. Project Area Map B-3

Figure B-3. Soils Map B-4

List of Photographs

Photograph D-1. San Miguel River with streamside terrace D-2

Photograph D-2. Perennial Creek #1 looking east D-2

Photograph D-3. Skunk Creek looking west at the bridge D-3

Photograph D-4. Turkey Creek looking west at Ilium Road D-3

Photograph D-5. Intermittent Creek #1 looking west at Ilium Road D-4

Photograph D-6. Ilium Road Spring D-4

Photograph D-7. Galloping Goose Trail looking south at the sedge wetland D-5

Photograph D-8. Riparian Shrubland Encroaching on the Galloping Goose Trail D-5

Photograph D-9. Coyote Willow Roadside Ditch along Ilium Road looking north D-6

Photograph D-10. Perennial Creek #4 Fringe Wetland looking east D-6

Abbreviations and Acronyms

Ecosphere	Ecosphere Environmental Services, Inc.
GIS	Geographic Information System
GPS	global positioning system
NHD	National Hydrologic Dataset
NRCS	Natural Resource Conservation Service
NWI	National Wetlands Inventory
OHWM	Ordinary High Water Mark
Project	Telluride Reliability Project
SMPA	San Miguel Power Association, Inc.
Telluride	Town of Telluride
Tri-State	Tri-State Generation and Transmission Association, Inc.
USACE	U.S. Army Corps of Engineers
USDA	U.S. Department of Agriculture
USFWS	U.S. Fish and Wildlife Service
USGS	United States Geological Survey
WUS	waters of the U.S.

1. Introduction

Ecosphere Environmental Services, Inc. (Ecosphere) was contracted by Reliable Power to determine the presence of jurisdictional wetlands and other waters of the U.S. (WUS) along the San Miguel Power Association, Inc.'s (SMPA) proposed Telluride Reliability Project (Project) west of Telluride, CO (Figure B-1 in Appendix B). This report includes both wetlands and WUS that meet the definition for the United States Army Corps of Engineers' (USACE) and those that are considered jurisdictional under San Miguel County's Land Use Code (San Miguel County 2014).

The purpose of this report is to identify and describe aquatic resources in the survey area. This report facilitates efforts to:

- Avoid or minimize impacts to aquatic resources during the design process
- Document aquatic resource boundary determinations for review by regulatory authorities
- Provide background information

The following sections of this report outline the proposed project actions, the methodology used during the delineations, and the existing conditions, type, and amount of wetlands and WUS identified. Maps defining the aquatic resources identified in the Project area are provided in Appendix A; additional informational maps, such as the vicinity map, project area map, and soil map, are provided in Appendix B. Wetland determination forms prepared during the survey are provided in Appendix C and photographs of the Project area are included in Appendix D. A table of plants observed is included in Appendix E. A completed version of the USACE Aquatic Resource Excel sheet detailing all aquatic resources found in the Project area is provided in Appendix F.

1.1 Project Description

San Miguel Power Association, Inc. (SMPA) and Tri-State Generation and Transmission Association, Inc. (Tri-State) propose the construction of the Telluride Reliability Project, which will increase and improve reliability of the existing electric system serving the Town of Telluride (Telluride) and Mountain Village communities and other rural customers in the region. The project includes construction of two underground distribution express circuits, a fiber optic cable between SMPA's Sunshine substation and SMPA's Telluride substation, the replacement of the majority of the existing overhead down valley distribution circuit with a new underground circuit co-located in the same trench with the two new express circuits, replacement of existing overhead customer services along Ilium Road and removal of the existing overhead distribution power line (Figure B-1 in Appendix B). The survey area includes the proposed underground electric line (5.6 miles long) within a 50-foot corridor for a total of 33.8 acres (Figure B-2 in Appendix B).

1.2 Site Location and Directions

The proposed Project is located in San Miguel County on the Gray Head, Colorado, 7.5-minute United States Geological Survey (USGS) quadrangle (Figure B-1 in Appendix B). The Sunshine substation is located just east of San Miguel County Road 63L (also known as Ilium Road), near the Ames Power Plant. The Telluride substation is located west of Telluride adjacent to Telluride's waste water treatment plant, near Society Turn. The legal description for the site is as follows:

Sections 31 and 32, Township 43 North, Range 9 West
New Mexico Principal Meridian

The proposed underground electric line is entirely within SMPA right-of-way and the USACE is allowed to access the site. The USACE should contact the Applicant prior to accessing the site. To access the site from Grand Junction, proceed to Telluride and prior to entering town, turn right (south) on Ilium Road. The Sunshine Substation where the proposed underground electric line begins is approximately 5 miles from the intersection with Highway 145.

Contact Information

Applicant[MS1]

Jeremy Fox
Service Planning Supervisor
San Miguel Power Association
P.O. Box 1150
720 N. Railroad St.
Ridgway, CO 81432
Office: (970) 626-5549 ext. 202

Email: jeremy@smpa.com

Property Owner

San Miguel Power Association
P.O. Box 1150
720 N. Railroad St.
Ridgway, CO 81432

Parcel No. 5669-054-00-024

Authorized Agent

Matthew Smith
Wetland Scientist
Ecosphere Environmental Services, Inc.
776 E. 2nd Avenue
Durango, CO 81301
Office: (970) 382-7256

Email: msmith@ecosphere-services.com

2. Methodology

2.1 Pre-Field Desktop Evaluations

Prior to the initiation of fieldwork, Ecosphere completed a preliminary geographic information system (GIS) desktop evaluation of the Project area using the following best available information:

- USGS 7.5-minute topographic quadrangles were reviewed for local and regional environmental settings relevant to surface waters, wetlands, and contours in the Project area (USGS 2013). The data was used to develop the field maps and identify drainages to survey while in the field.
- National Wetland Inventory (NWI) maps generated by the United States Fish and Wildlife Service (USFWS) for the Project area were evaluated to identify previously mapped historic surface water areas and hydric vegetation (Figure B-2 in Appendix B) (USFWS 2014).
- The Natural Resource Conservation Service (NRCS) Web Soil Survey for the Project area was reviewed for the presence of hydric soils in the survey area (NRCS 2016).
- The National Hydrologic Dataset (NHD) for the area was reviewed, and applicable water features were applied to a field map base for the survey area (USGS 2008). Any NHD-mapped "bluelines" that were identified were included on field maps and visited in the field.

2.2 Field Evaluations

A pedestrian survey/delineation was conducted by experienced Ecosphere wetlands scientists within the proposed project boundaries to identify any wetlands or other WUS that may occur in the study area.

The boundaries of WUS and wetlands, as identified by wetland scientists, were not flagged in the field due to the high visibility of the area. All wetland and other WUS boundaries and Ordinary High Water Mark (OHWM) lines were mapped with a sub-meter Trimble GeoXT® global positioning system (GPS) unit and documented on maps provided in Appendix A. Photographs were taken where each wetland and OHWM was identified and are included in Appendix D. Data was recorded using an ArcPad GPS data dictionary developed by Ecosphere that includes all data required for submittal to the USACE in the Aquatic Resources Excel Spreadsheet (Appendix F).

All digital data for the site, including aquatic resource boundary mapping and data point locations, have been included with this report as ESRI shape-files. Each GIS data file includes a metadata file containing the geographic coordinates, projection, and datum.

2.2.1 Wetlands

Wetlands in the project area were delineated using guidance provided in USACE Wetlands Delineation Manual (USACE 1987) and the *Regional Supplement to the Corps of Engineers Wetland Delineation Manual: Western Mountains, Valleys, and Coast Region* (USACE 2010).

Under the delineation procedures identified in these manuals, an area must exhibit characteristic wetland hydrology, hydric soils, and hydrophytic vegetation to be considered a wetland. The USACE requires that under

normal circumstances, all three of these conditions be met for an area to be defined as a wetland (USACE 1987). Wetlands are generally defined by the USACE as:

> "Those areas that are inundated or saturated by surface or groundwater at a frequency and duration sufficient to support, and that under normal circumstances do support, a prevalence of vegetation typically adapted for life in saturated soil conditions. Wetlands generally include swamps, marshes, bogs, and similar areas." (USACE 1987)

Any area that appeared to display these characteristics was documented using the USACE's *Western Mountains, Valleys, and Coast Region Wetland Determination Form*.

2.2.1.1 Hydrophytic Vegetation

The USACE's 1987 Wetland Delineation Manual defines hydrophytic vegetation as "the community of macrophytes that occurs in areas where inundation or soil saturation is either permanent or of sufficient frequency and duration to exert a controlling influence on the plant species present." Using the USACE's techniques for identifying hydrophytic vegetation, as defined in Part III, paragraph 35 of the 1987 Wetland Delineation Manual, Ecosphere evaluated vegetation on the project site for hydrophytic indicators. Hydrophytic vegetation determinations for this project were based primarily on determining species dominance within a sample area as indicated via visual observation, application of the Dominance Test and/or Prevalence Index worksheet on each sample area determination data form, and identification of the dominant species' wetland indicator status, as defined by the USACE's *National Hydric Plant List* (Lichvar et al. 2014).

Dominant species were basically defined as those species in each stratum that, when ranked in decreasing order of abundance, exceed 50 percent of the total dominance measure for that stratum, plus any additional plant species comprising 20 percent or more of the total dominance measure for the stratum. Wetland indicator status ratings include obligate, facultative wetland, facultative, facultative upland, upland, no indicator, and not listed. Scientific nomenclature of all plant species identified in this report follows that of the United States Department of Agriculture (USDA) Plants Database (USDA 2012).

The locations of sampling points were selected to capture the primary vegetation communities of the wetland and adjacent upland areas. Points were located within approximately 15 feet of each other to highlight the transition from wetland to upland. At each sample plot's observation point, dominant trees, shrubs, graminoids, and forbs were identified and recorded on the wetland determination form.

2.2.1.2 Hydric Soils

The National Technical Committee for Hydric Soils defines a hydric soil as "a soil that is saturated, flooded, or ponded long enough during the growing season to develop anaerobic conditions that favor the growth and regeneration of hydrophytic vegetation" (USACE 1987, p. 20).

Most hydric soils exhibit characteristic morphologies that result from repeated periods of saturation or inundation for more than a few days. Saturation or inundation combined with microbial activity in the soil causes the depletion of oxygen. These processes are evident in the field and can include high organic contents, gley formations, development of redoximorphic features, and other hydric soil indicators. The presence of hydric

soils at each sample point was determined using the definition, criteria, and indicators identified in the 1987 Wetland Delineation Manual (with revisions related to the 1991 and 1992 guidance memorandums from the USACE) and *Regional Supplement to the Corps of Engineers Wetland Delineation Manual: Western Mountains, Valleys, and Coast Region* (USACE 2010).

Soil pits were dug in each sample location to a sufficient depth to determine hydric characteristics of wetland soils and hydrology. Parameters evaluated included soil color, texture, saturation and other indicators of inundation. Soil samples were then examined for soil texture and hydric soil indicators. Soil colors were evaluated using a Munsell® soil color chart (Gretag/Macbeth 2000).

2.2.1.3 Wetland Hydrology

Hydrophytic vegetation and hydric soil indicators typically represent a site's medium- to long-term history. According to the USACE 1987 Manual, "the term 'wetland hydrology' encompasses all hydrologic characteristics of areas that are periodically inundated or have soils saturated to the surface at some time during the growing season" (USACE 1987, p. 33). Hydrology indicators are the most inconsistent of wetland indicators, especially in the arid west where extended dry seasons are common and precipitation within a year has extreme temporal and spatial variability.

Assessment of the hydrologic criterion was based on primary and secondary indicators, as described in Section III, Paragraph 49 of the 1987 Manual and the Supplement (USACE 2008) and the *Regional Supplement to the Corps of Engineers Wetland Delineation Manual: Western Mountains, Valleys, and Coast Region* (USACE 2010). Primary indicators include observation of surface water or saturation, as well as evidence of recent inundation (e.g., oxidized rhizospheres along living roots) or current or recent soil saturation (e.g., hydrogen sulfide odor, oxidized rhizospheres). Secondary indicators also include indicators of recent inundation or saturation (e.g., drainage patterns, saturation visible on aerial imagery).

2.2.2 San Miguel Regulated Wetlands

It is the policy of San Miguel County, Colorado to preserve and protect water resources, identified wetland areas, watershed basins, and riparian areas. San Miguel County, Colorado's definition of a wetland differs from that of the USACE in that an area only needs hydrophytic vegetation to classify as a wetland. Hydric soils and hydrology are not necessary. Their definition states: "wetland areas periodically inundated and normally characterized by the prevalence of vegetation that requires saturated soil conditions for growth and reproduction, excluding lands periodically irrigated for agricultural purposes" (San Miguel County 2014). As such, an area only needs to pass the Dominance Test or Prevalence Index as defined in Section 2.2.1.1 to be considered a San Miguel County wetland.

2.2.3 Ordinary High Water Mark

For other WUS (i.e., washes), a field determination was made on whether drainage features within the project parcel supported a defined OHWM (if any). The USACE generally defines OHWM as:

> "The term ordinary high water mark means that line on the shore established by the fluctuations of water and indicated by physical characteristics such as a clear, natural line impressed on the bank,

shelving, changes in the character of soil, destruction of terrestrial vegetation, the presence of litter and debris, or other appropriate means that consider the characteristics of the surrounding areas" (USACE 2005).

General characteristics for determining OHWM in the Project area were identified using guidance provided in USACE regulatory guidance letter No. 05-05, *Ordinary High Water Mark Identification* (USACE 2005). OHWMs for any ephemeral or intermittent WUS were delineated using *A Field Guide to the Identification of the Ordinary High Water Mark (OHWM) in the Arid West Region* (USACE 2008).

3. Existing Conditions

The survey of the project area was completed on May 4 and 23, 2016 by Matthew Smith, an Ecosphere wetland scientist. The weather during the survey was clear on both days with temperatures ranging from 55 to 65 degrees Fahrenheit. The entire survey area of 33.8 acres as defined on Figure B-2 in Appendix B was evaluated for the presence of wetlands and other WUS including those regulated by San Miguel County, Colorado. The results of both pre-field data review and field review for the subject property is included in the following sections.

3.1 Current Land Uses, Modifications, and Topography

The proposed underground electric line follows the South Fork of the San Miguel River along the edge of Ilium Road for approximately 4 miles of the overall length (Figure B-2 in Appendix B). The underground electric line is confined to the road and the roadside ditch for the majority of this section. The South Fork of the San Miguel River valley bottom is steep in sections with cliff faces along the edge of Ilium Road. There are several ephemeral, intermittent, and perennial streams including Vance Creek and Turkey Creek that flow west into the South Fork of the San Miguel River from the steep slopes to the east. The proposed underground electric line follows the existing transmission line right-of-way for two sections near the confluence with the San Miguel River.

The proposed underground electric line then climbs a steep slope (25-40 degrees) to intercept the Galloping Goose Trail that traverses the south valley side of the San Miguel River (Figure B-2 in Appendix B). The Galloping Goose Trail is located on an old railway bed that is approximately 15 feet wide with shallow grades. One large, perennial stream (Skunk Creek) flows north into the San Miguel River and the Galloping Goose Trail spans the creek with a bridge. At the eastern terminus, the trail enters the San Miguel River valley bottom and is raised approximately 10 feet above the valley bottom to avoid the saturated soils and associated wetlands. The proposed underground electric line follows the trail for approximately 1 mile before crossing the San Miguel River and entering the Telluride Substation.

3.2 Vegetation

The South Fork of the San Miguel River valley bottom is characterized by a cottonwood woodland adjacent to the river with a canopy of narrowleaf cottonwood (*Populus angustifolia*) and an understory consisting primarily of willow species (*Salix* spp.). The east side of Ilium Road transitions to a mixed conifer-aspen forest with a canopy of Engelmann spruce (*Picea engelmannii*) and aspen (*Populus tremuloides*). The understory contains a mix of mountain shrubs including prickly currant (*Ribes lacustre*), willow, wood's rose (*Rosa woodsii*). Grasses and forbs along the roadway consist primarily of smooth brome (*Bromus inermis*), Kentucky bluegrass (*Poa pratensis*), timothy (*Phleum pratense*), dandelion (*Taraxacum officinale*), and cinquefoil (*Potentilla* spp.).

The section along the Galloping Goose Trail bisects the mixed conifer-aspen forest similar to that along Ilium Road. Along the raised bed within the San Miguel River valley bottom, willows and other riparian shrubs encroach the raised bed from either side and there is a wetland with standing water south of the trail.

A list of all species captured on the wetland determination forms is included in Appendix E.

3.3 Soils

Based on the NRCS Web Soil Survey, there are seven soil map units present in the survey area (see Figure B-3 in Appendix B; Table 3-1). Of those, two are listed as partially hydric (NRCS 2016). The partially hydric soil map units are located in the South Fork of the San Miguel River and San Miguel River valley bottoms near the rivers (Figure B-3 in Appendix B).

Table 3-1. USDA Soil Types in the Project Area

Soil Type[1]	Hydric?
Borolls-Rock outcrop complex, 40 to 90 percent slopes	No
Cryaquolls-Borohemists complex, 0 to 5 percent slopes	Partially hydric
Cryoboralfs and Cryoborolls, slumped, 15 to 65 percent slopes	No
Cryoborolls-Cryaquolls association, 0 to 15 percent slopes	Partially hydric
Gothic-Lizardhead complex, 5 to 40 percent slopes	No
Quazar, cool-Varden complex, 15 to 65 percent slopes, extremely stony	No
Washboard-Rock outcrop complex, 20 to 90 percent slopes, very stony	No

[1] NRCS 2016.

3.4 Hydrology

The proposed underground electric line follows the South Fork of the San Miguel River and the San Miguel River valley bottoms. Both of these features are perennial streams that originate in the San Juan Mountains. The South Fork of the San Miguel River flows into the San Miguel River just west of the proposed underground electric line. The San Miguel River flows west into the Dolores River and ultimately into the Colorado River just upstream of Lake Powell. The valley bottom just west of where the proposed underground electric line crosses the San Miguel River is bisected by the Galloping Goose Trail on a raised bed. This creates a depression south of the proposed underground electric line where water collects after snowmelt and large storm events. The depression bottom is characterized by standing water and saturated soils that supports a large wetland area just outside of the 50-foot buffer for the proposed underground electric line.

Several ephemeral, intermittent, and perennial streams flow either west into the South Fork of the San Miguel River and under Ilium Road or north into the San Miguel River under the Galloping Goose Trail (Figure B-2 in Appendix B). The survey was conducted in May during spring runoff so all but one feature mapped in the field had flowing water. There were signs that several were intermittent and flow only during snow melt and after large storm events.

4. Aquatic Resources

Appendix A includes the Aquatic Resources Delineation Maps with all of the features included in Tables 4-1 and 4-2. Wetland Determination Forms were completed for all possible wetland locations and are provided in Appendix C of this report.

Table 4-1 includes a summary of the USACE-jurisdictional wetlands and WUS delineated within the 50-foot buffer.

Table 4-1. Delineated USACE Jurisdictional Aquatic Resources Identified Within the Survey Area

Name	NWI Classification[1]	Latitude[2]	Longitude[2]	Length (Feet)	Area (Acres)	Aquatic Resources Delineation Map[3]
San Miguel River	R3UB	37.948	-107.877	128	0.101	A-1
San Miguel River Fringe Wetlands	PEM	37.948	-107.877	N/A	0.023	A-1
Perennial Channel #1	R3UB	37.949	-107.877	92	0.006	A-1
Skunk Creek	R3UB	37.945	-107.885	82	0.030	A-2
Vance Creek	R3UB	37.926	-107.900	48	0.005	A-3
Ephemeral Stream	R4SB	37.925	-107.900	82	0.004	A-3
Turkey Creek	R3UB	37.914	-107.901	72	0.017	A-4
Ilium Road Spring	R3UB	37.913	-107.901	9	0.001	A-4
Intermittent Creek #1	R4SB	37.905	-107.906	199	0.023	A-5
Intermittent Creek #2	R4SB	37.900	-107.907	110	0.005	A-6
Perennial Channel #3	R3UB	37.895	-107.906	70	0.003	A-7
Perennial Channel #4	R3UB	37.890	-107.905	398	0.026	A-8

[1] R3UB – upper perennial, unconsolidated bottom; R4SB – intermittent, streambed; PEM – palustrine, emergent; R4SB – intermittent/ephemeral, streambed (Cowardin et al. 1979).
[2] North American Datum 83, decimal degrees.
[3] Aquatic Resources Delineation Maps located in Appendix A.

Table 4-2 includes a summary of the San Miguel County-jurisdictional wetlands delineated within the 50-foot buffer.

Table 4-2. Delineated San Miguel County Jurisdictional Aquatic Resources Identified Within the Survey Area

Name	NWI Classification[1]	Latitude[2]	Longitude[2]	Length (Feet)	Area (Acres)	Aquatic Resources Delineation Map[3]
Galloping Goose Trail Riparian Shrubland	PSS	37.948	-107.877	N/A	0.74	A-1
Coyote Willow Roadside Ditch	PSS	37.949	-107.877	N/A	0.014	A-6
Perennial Creek #4 Fringe Wetland	PEM	37.890	-107.905	N/A	0.023	A-8

[1] PEM – palustrine, emergent; PSS – palustrine scrub-shrub (Cowardin et al. 1979).
[2] North American Datum 83, decimal degrees.
[3] Aquatic Resources Delineation Maps located in Appendix A.

4.1 San Miguel River

SMPA plans to bore under the San Miguel River and connect to the Telluride Substation (Figure A-1 in Appendix A). The San Miguel River is approximately 33 feet wide at the proposed bore location. There are streamside terraces that vary between 2 and 6 feet wide that are connected to the San Miguel River on either bank (Photo D-1 in Appendix D). It was determined that wetlands are present on these terraces dominated by sedges adjacent to the river and timothy and Baltic rush (*Juncus balticus*) along the edges of the terrace as it transitions to the floodplain. The area passed both the Dominance Test and Prevalence Index (Wetland Determination Form 1A in Appendix C). In addition, the terraces had hydric soils (Redox Dark Surface [F6]) and wetland hydrology (Saturation [A3] and Oxidized Rhizospheres along Living Roots [C3]) as defined by the USACE (2010). Overall, 128 feet and 0.101 acre of the San Miguel River was delineated and two fringe wetlands along the east and west banks that totaled 0.02 acre (Table 4-1).

A perennial creek flows into the San Miguel River from a culvert under the Telluride Substation (Figure A-1 in Appendix A). The creek was 3 feet wide and 92 feet were delineated within the Project area for a total of 0.006 acre (Table 4-1). No wetlands were present along the edges of the creek (Photo D-2 in Appendix D).

4.2 Skunk Creek

Skunk Creek flows north into the San Miguel River along the Galloping Goose trail west of the Telluride Substation (Figure A-2 in Appendix A). The trail spans the creek with a bridge. The creek is 10 to 15 feet wide at the crossing location. Overall, 82 feet and 0.03 acre of Skunk Creek were delineated within the Project area (Table 4-1). No wetland fringe was present; however, several riparian trees and shrubs including willows, cottonwoods, and aspen were present within the creek and along its banks (Photo D-3 in Appendix D).

4.3 Ilium Road Drainages

Ilium Road follows the South Fork of the San Miguel valley bottom and the proposed underground electric line is located in the roadbed or roadside ditch. Numerous ephemeral, intermittent, and perennial WUS flow into the South Fork of the San Miguel from the steep valley side (Figure B-2 in Appendix B). Overall, seven WUS were delineated within the Project area along Ilium Road (Figures A-3 to A-8 in Appendix A).

Four perennial WUS were delineated including Vance and Turkey Creeks. These features varied in width from 2 to 10 feet with Turkey Creek the largest (Photo D-4 in Appendix D). None of the perennial WUS had USACE-defined wetlands associated with the fringes of the waterways. One creek (Perennial Creek #4) has a San Miguel County, Colorado wetland along its fringes (see Section 4.5 for description). The survey was conducted in May during spring runoff, so every creek was flowing. It is possible that Perennial Creek #3 and Perennial Creek #4 are intermittent and flow only during snowmelt and after large storm events. The NHD layer mapped Perennial Creek #3 as perennial and Perennial Creek #4 as intermittent (USGS 2008). Overall, 0.051 acre was delineated for these four WUS (Table 4-1).

Two intermittent and one ephemeral WUS were delineated in the Project Area. These were all 2 feet wide. Each of the features carry large amounts of sediment during large storm events (Photo D-5 in Appendix D). Overall, 0.032 acre was delineated for these three features (Table 4-1).

4.4 Ilium Road Spring

A spring was observed adjacent to Ilium Road and within the 50-foot buffer. The spring emerged from the road cut and water flowed under the road through a culvert and onto the South Fork of the San Miguel River. The spring and associated OHWM was approximately 0.001 acre. The spring is approximately 10 feet from the proposed underground electric line centerline. No wetlands were associated with the spring, but there was moss within the OHWM of the channel leading from the spring (Photo D-6 in Appendix D).

4.5 San Miguel County Wetlands

Three areas exhibited hydric vegetation but not hydric soils or hydrology. These areas are not considered jurisdictional by the USACE, but do meet the wetland definition for San Miguel County, Colorado (San Miguel County 2014).

4.5.1 Galloping Goose Trail Riparian Shrubland

West of the proposed San Miguel River crossing, the Galloping Goose Trail follows a raised roadbed across a low-lying area adjacent to the San Miguel River (Figure A-1 in Appendix A). South of the trail, there is a large depression that includes a sedge-dominated wetland area that meets the USACE definition (Photo D-7 in Appendix D). Ecosphere did not delineate this area since it was outside of the 50-foot buffer and SMPA would restrict all construction impacts to the 15-foot wide trail.

Willows and other riparian shrubs including wood's rose, prickly currant, and twinberry honeysuckle (*Lonicera involucrata*) encroached on the trail from either side of the roadbed (Photo D-8 in Appendix D). The steep slopes of the roadbed included hydric vegetation that passed the Dominance Test, but not the Prevalence Index

(Wetland Determination Form 4A in Appendix C). The steep slopes did not exhibit hydric soils or wetland hydrology as the slopes were 8 to 10 feet above the valley bottom. Overall, 0.74 acre of San Miguel County, Colorado wetland areas were delineated on the north and south sides of the Galloping Goose Trail (Table 4-2).

4.5.2 Coyote Willow Roadside Ditch

Along Ilium Road, Ecosphere delineated a coyote willow (*Salix exigua*) patch in the roadside ditch (Figure A-6 in Appendix A). There was no flowing or standing water in the ditch and the willows likely connect to the shallow groundwater table. Vegetation was dominated by coyote willow with Kentucky bluegrass and dandelions in the understory (Photo D-9 in Appendix A). The area passed the Dominance Test and the Prevalence Index was less than 3 (2.7); however, it did not exhibit hydric soils or wetland hydrology (Wetland Determination Form 3A in Appendix C). This San Miguel County, Colorado wetland area was 0.014 acre.

4.5.3 Perennial Creek #4 Fringe Wetland

Adjacent to Perennial Creek #4, a Baltic rush vegetation community extends up the side slopes of the creek (Figure A-8 in Appendix A). It is likely that this creek does not flow during the drier summer months. The creek is entrenched within the area and is not connected to the Baltic rush community on its slopes. This community includes high cover of Baltic rush (70 percent cover) with sparse cover of common mullein (*Verbascum thapsus*), Kentucky bluegrass, and Canada thistle (*Cirsium arvense*) (Photo D-10 in Appendix D). The area passed the Dominance Test and had a Prevalence Index below 3.0 (2.4); however, it did not exhibit hydric soils or wetland hydrology (Wetland Determination Form 2A in Appendix C). This San Miguel County, Colorado wetland area was 0.023 acre.

5. Discussion

Ecosphere conducted the delineation during snowmelt which increases flow in all waterways including intermittent streams that may not flow year round. Using the NHD layer, stream characteristics, and adjacent vegetation, Ecosphere classified the waterways within the Project area (Table 4-1). It is possible that some of the perennial waterways are actually intermittent, but that would not change the length or area delineated.

The wetland area south of the Galloping Goose Trail includes saturated areas dominated by sedges and other obligate wetland species. Ecosphere did not delineate these USACE wetland areas as they were outside the 50-foot buffer. SMPA has committed to restricting all construction activities to the surface of the Galloping Goose Trail and installing appropriate best management practices to ensure that no sediment or erosion impacts the wetland area to the south or the San Miguel River which is approximately 50 feet north of the trail.

The proposed underground electric line would pass within 10 feet of a perennial spring (see Section 4.4 for description). It is likely that the proposed project would be permitted under Nationwide Permit 12 – Utility Line Activities – if it requires a Clean Water Act permit. Under the USACE 2012 Regional Conditions in Colorado, a Pre-Construction Notification is required for any activities that occur within 100 feet of a spring.

6. References

Cowardin, L. M., V. Carter, F. C. Golet, and E. T. LaRoe. 1979. Classification of wetlands and deepwater habitats of the United States. U.S. Fish and Wildlife Service, Office of Biological Services, Washington, D.C. FWS/OBS-79/31.

Gretag/Macbeth. 2000. Munsell® color. New Windsor, New York.

Lichvar, R. W., M. Butterwick, N. C. Melvin, and W. N. Kirchner. 2014. The National Wetland Plant List: 2014 Update of Wetland Ratings. Phytoneuron 2014-41: 1-42.

San Miguel County. 2014. San Miguel County Land Use Code. Available online at: http://www.sanmiguelcounty.org/243/Land-Use-Code. Accessed on May 20, 2016.

Soil Survey Staff, Natural Resources Conservation Service, United States Department of Agriculture (NRCS). 2016. Web Soil Survey. Available online at: http://websoilsurvey.nrcs.usda.gov/. Accessed on May 20, 2016.

U.S. Army Corps of Engineers (USACE). 1987. Corps of Engineers Wetlands Delineation Manual, Technical Report Y-87-1, U.S. Army Engineer Waterways Experiment Station, Vicksburg, Mississippi.

USACE. 2005. Regulatory Guidance Letter No. 05-05, Ordinary High Water Mark Identification. December 7, 2005.

USACE. 2008. A Field Guide to the Identification of the Ordinary High Water Mark (OHWM) in the Arid West Region of the Western United States. Cold Regions Research and Engineering Laboratory: Hanover, NH.

USACE. 2010. Regional Supplement to the Corps of Engineers Wetland Delineation Manual: Western Mountains, Valleys, and Coast Region (Version 2.0), ed. J. S. Wakeley, R. W. Lichvar, and C. V. Noble. ERDC/EL TR-10-3.

U.S. Department of Agriculture (USDA). 2012. National Plants Database. Available online at: http://plants.usda.gov. Accessed on September 3, 2015.

U.S. Fish and Wildlife Service (USFWS). 2014. National Wetlands Inventory website. U.S. Department of the Interior, Fish and Wildlife Service, Washington, D.C. Accessed at: http://www.fws.gov/wetlands.

U.S. Geological Society (USGS). 2008. National Hydrography Dataset, High Resolution. Reston, Virginia, USA: U.S. Geological Society.

USGS. 2013. Gray Head quadrangle, Colorado [map]. 1:24,000. 7.5 Minute Series. Reston, Va.

Wetland Training Institute, Inc. (WTI). 1995. Field Guide for Wetland Delineation: 1987 Corps of Engineers Manual. Poolesvile, MD. WTI 95-3.

Appendix A – Aquatic Resource Delineation Maps

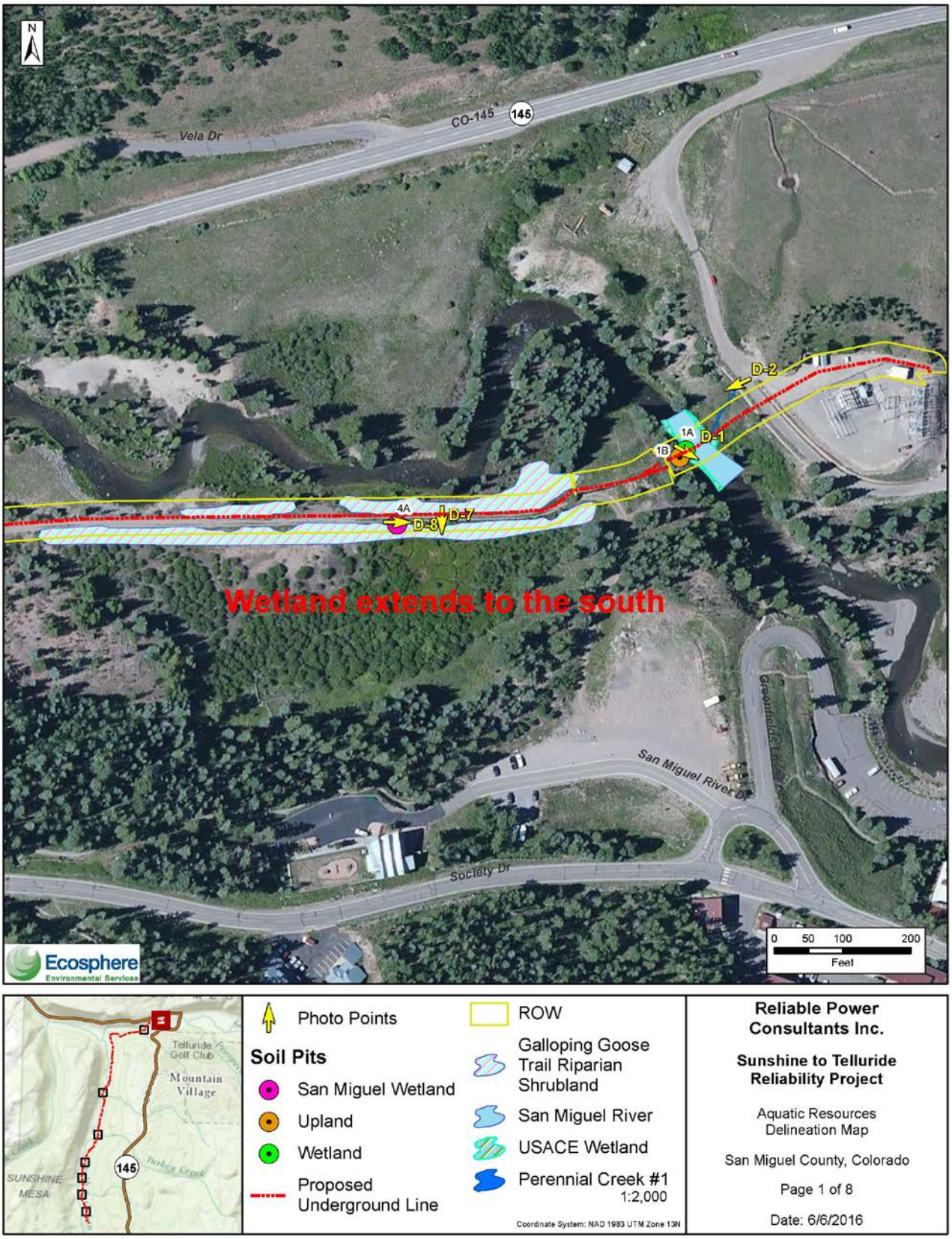

Figure A-1. Aquatic Resources Delineation Map (1 of 8)

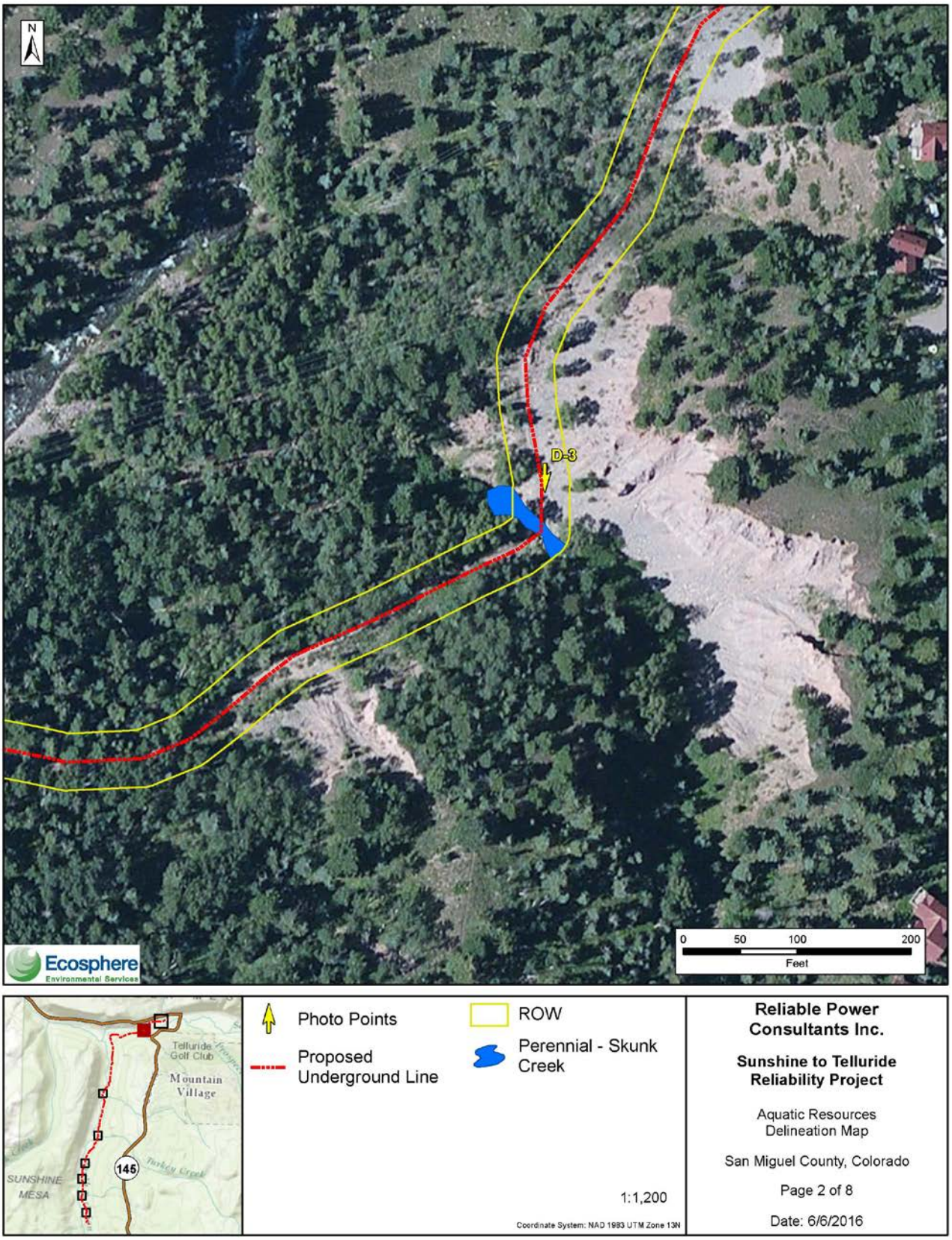

Figure A-2. Aquatic Resources Delineation Map (2 of 8)

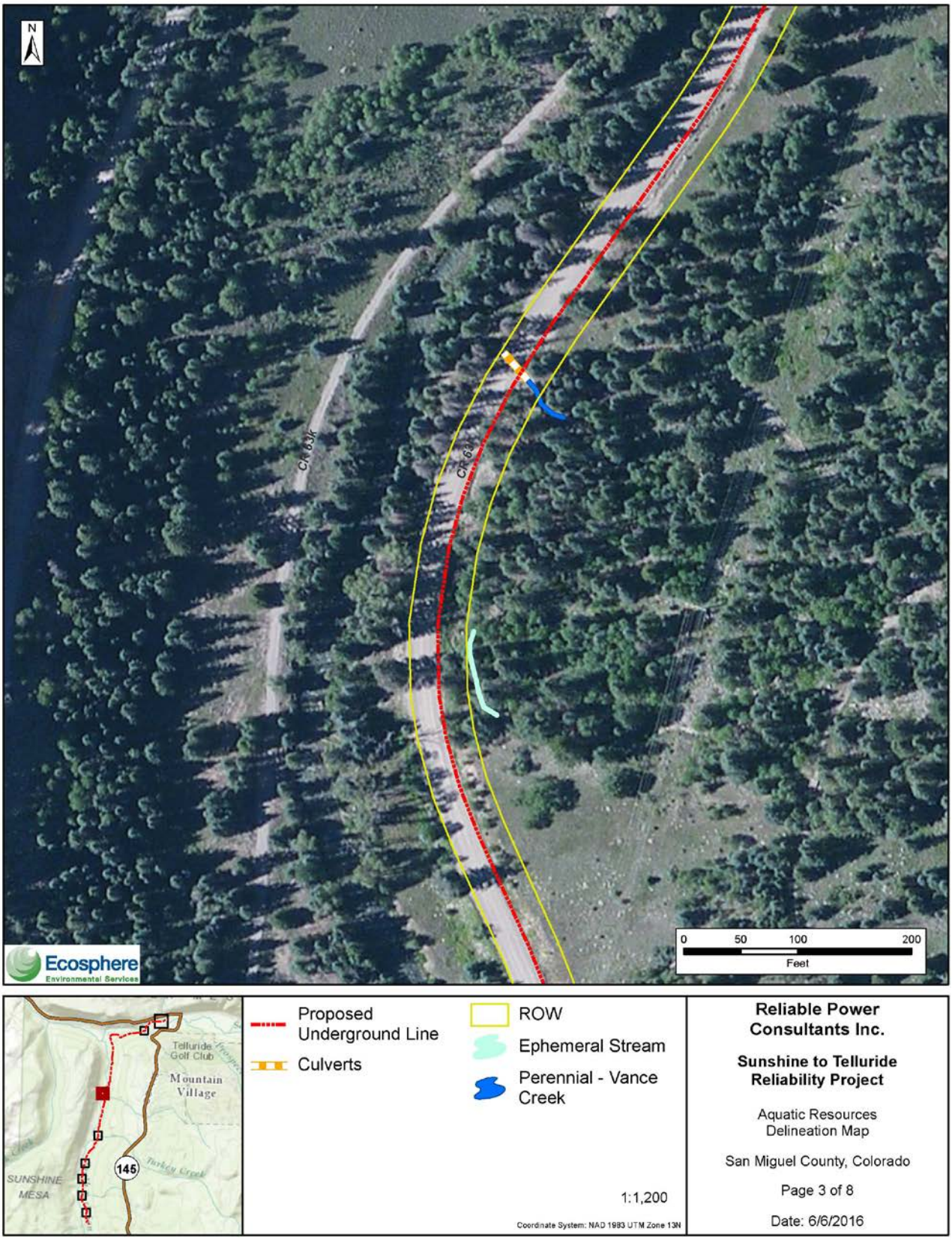

Figure A-3. Aquatic Resources Delineation Map (3 of 8)

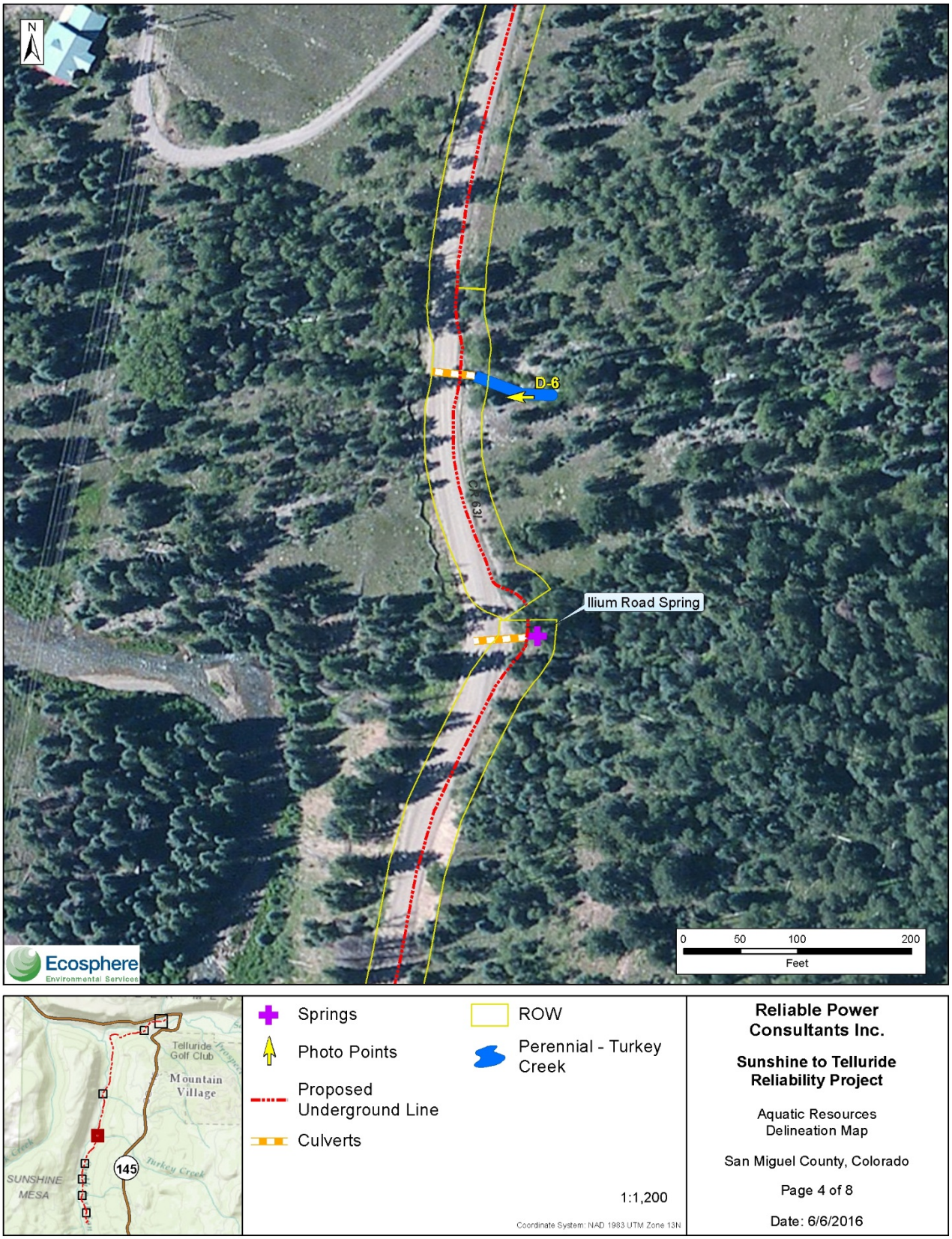

Figure A-4. Aquatic Resources Delineation Map (4 of 8)

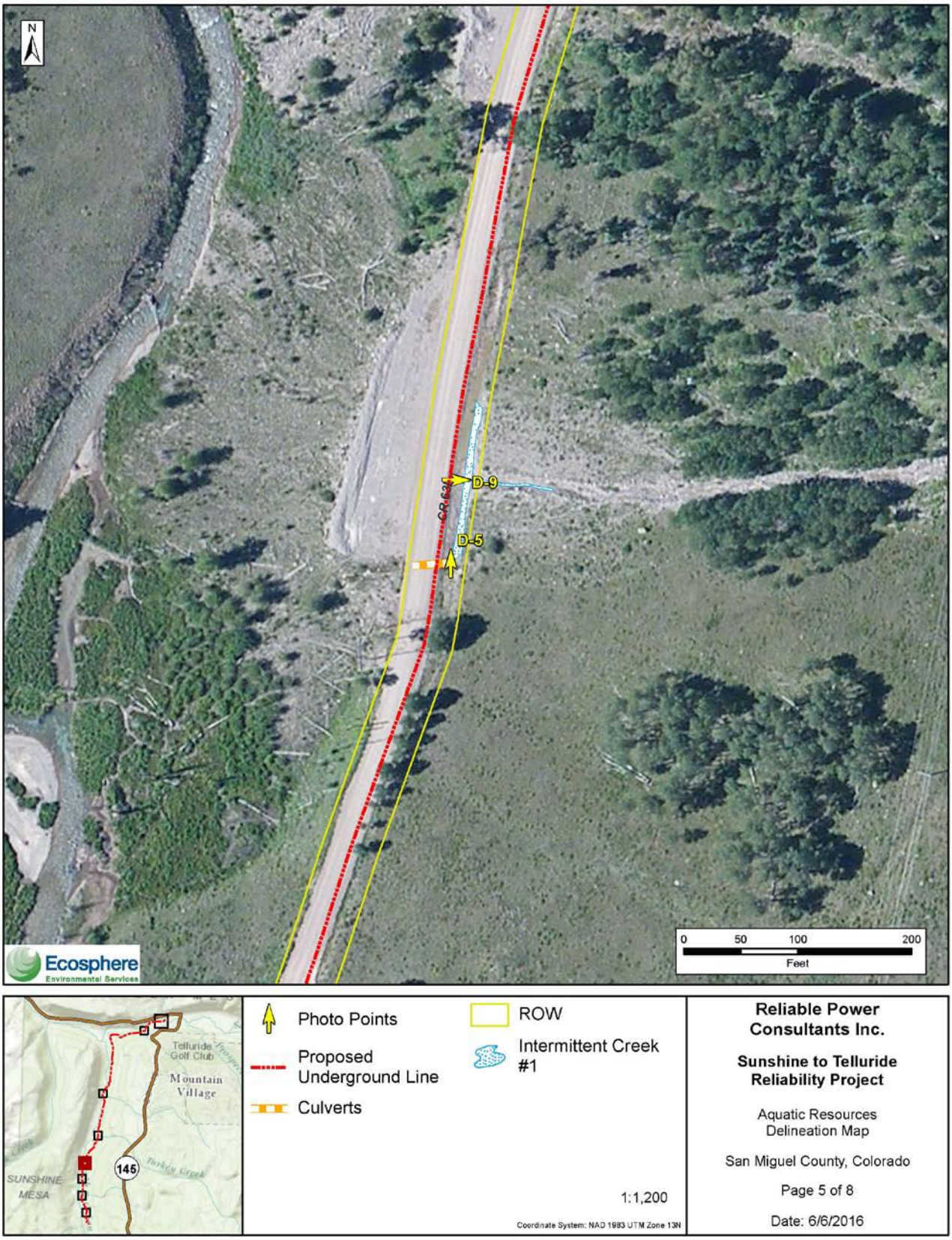

Figure A-5. Aquatic Resources Delineation Map (5 of 8)

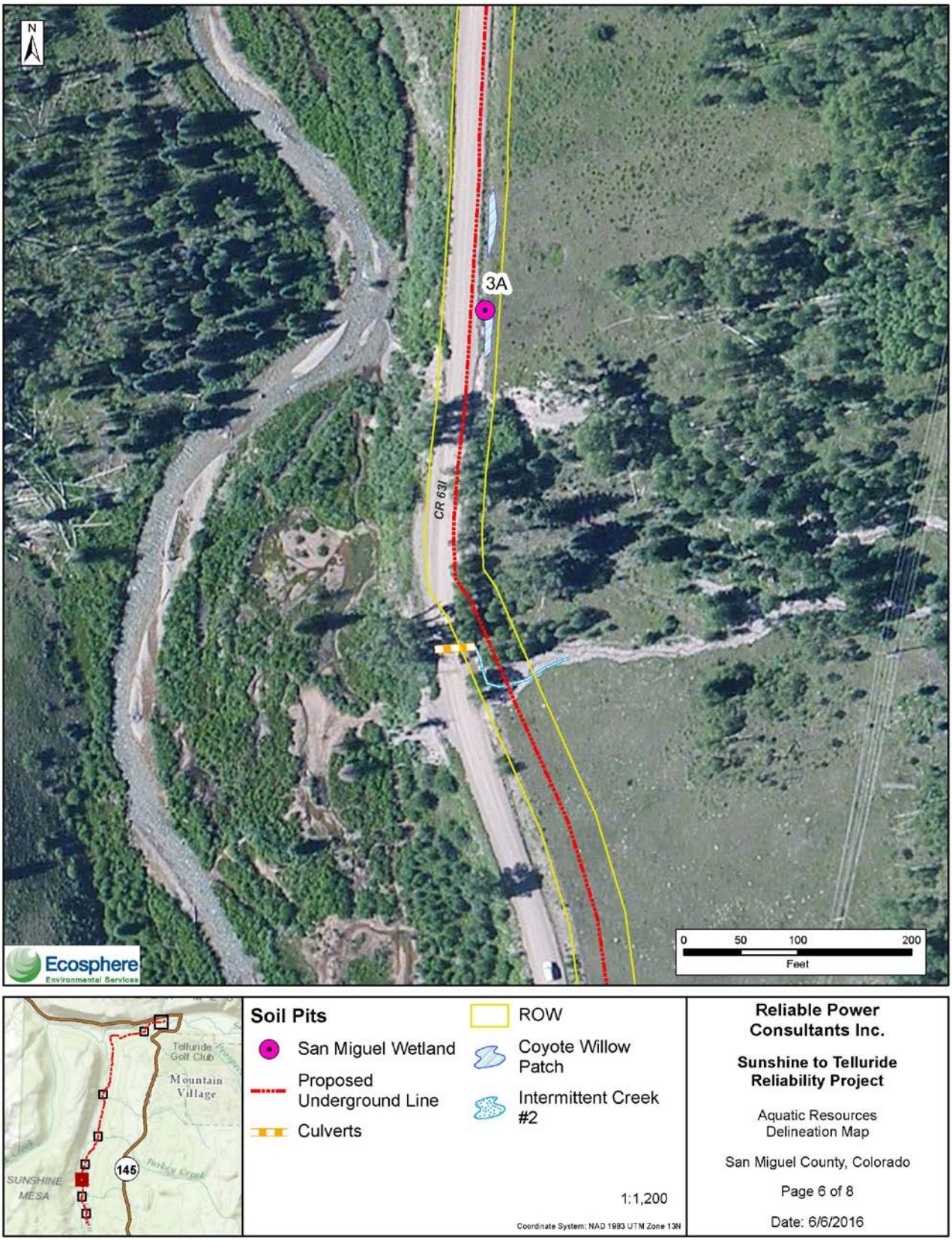

Figure A-6. Aquatic Resources Delineation Map (6 of 8)

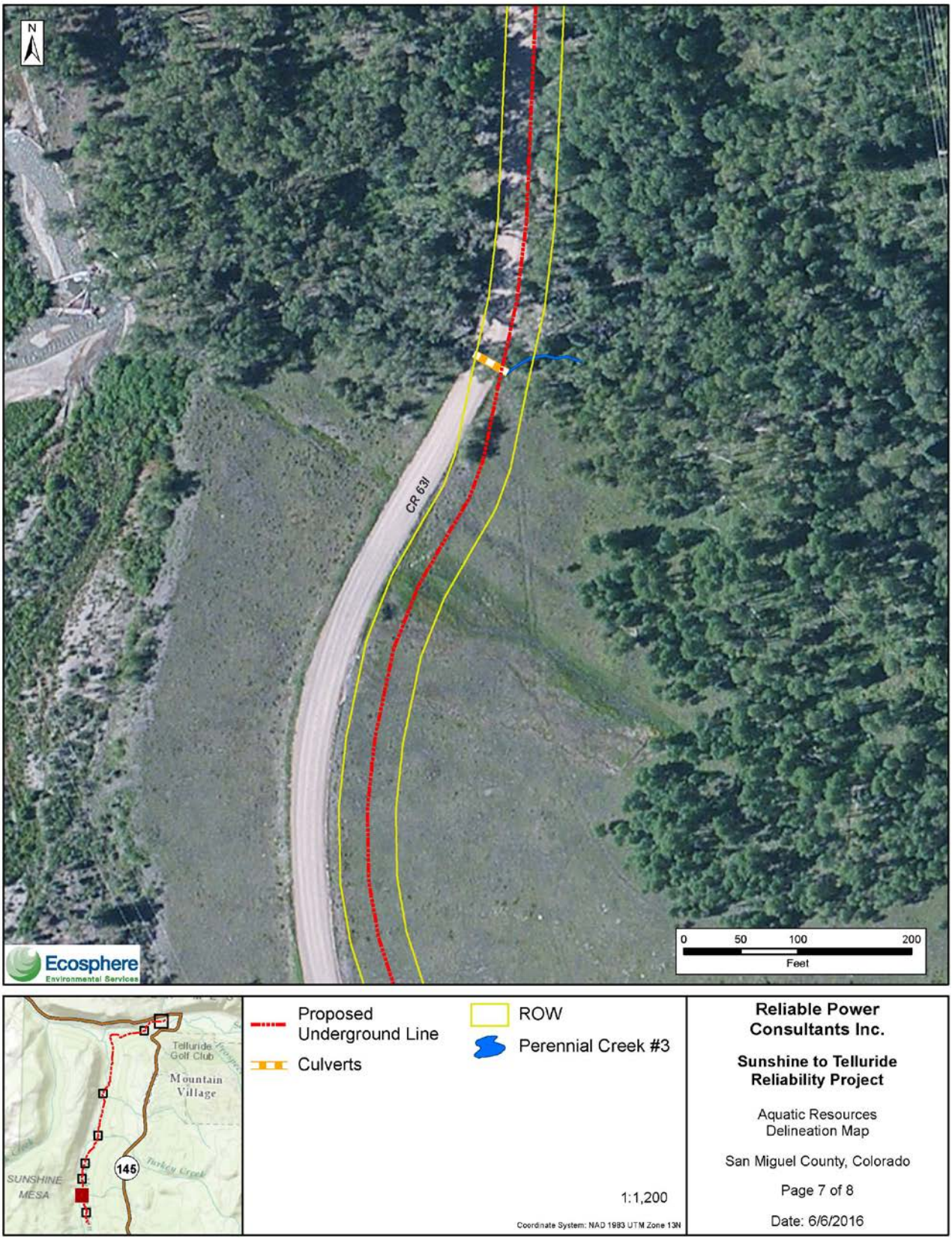

Figure A-7. Aquatic Resources Delineation Map (7 of 8)

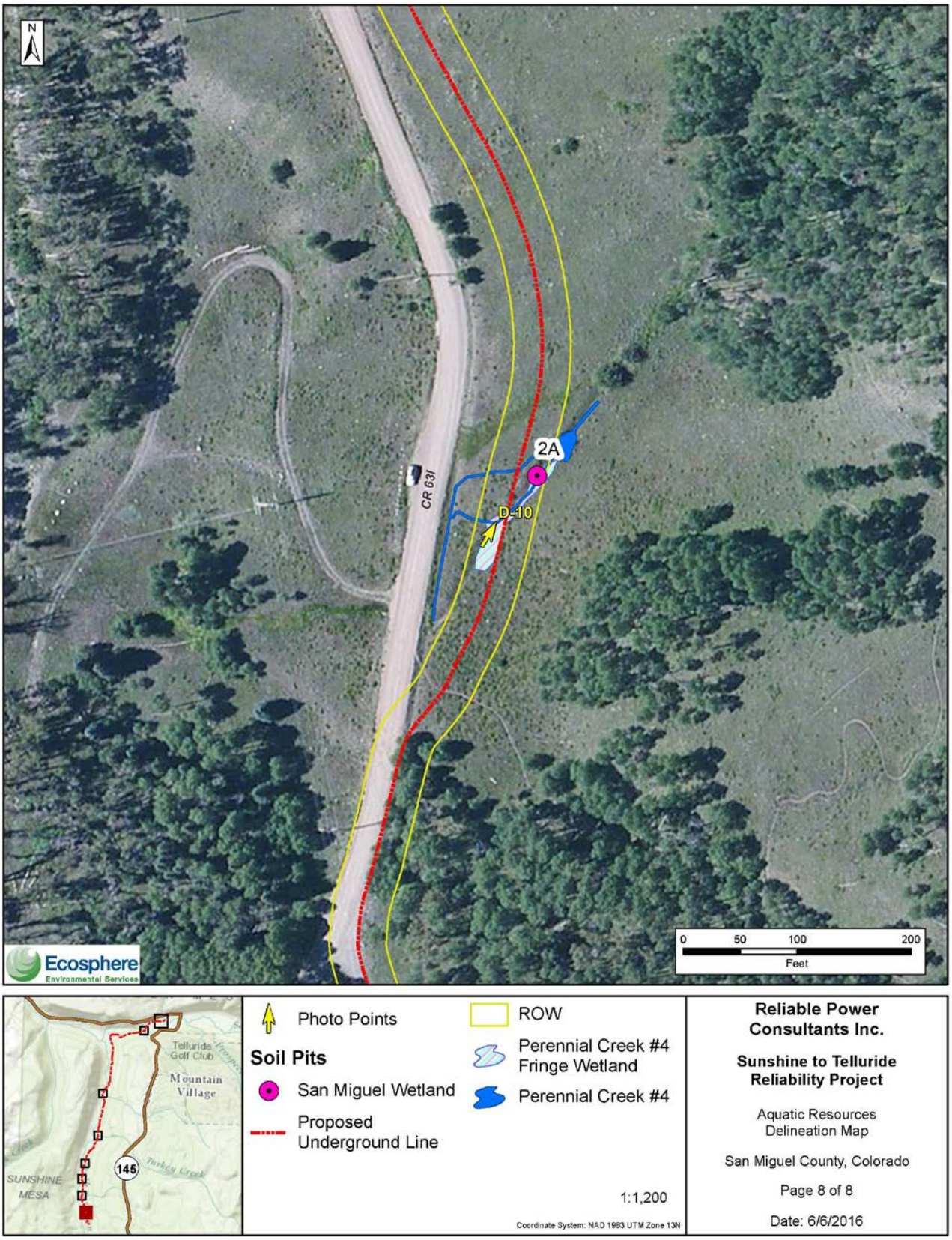

Figure A-8. Aquatic Resources Delineation Map (8 of 8)

Appendix B – Supporting Maps

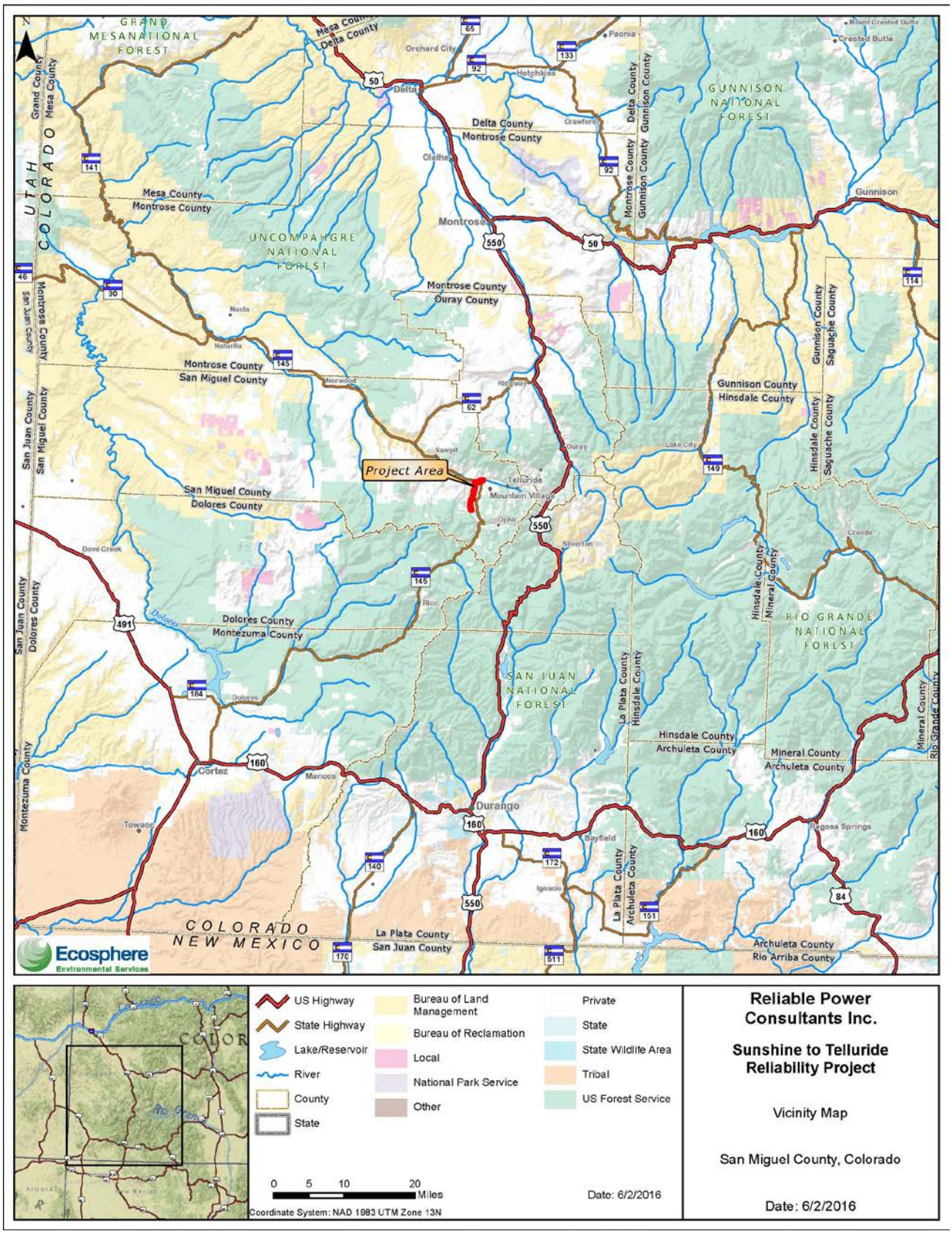

Figure B-1. Vicinity Map

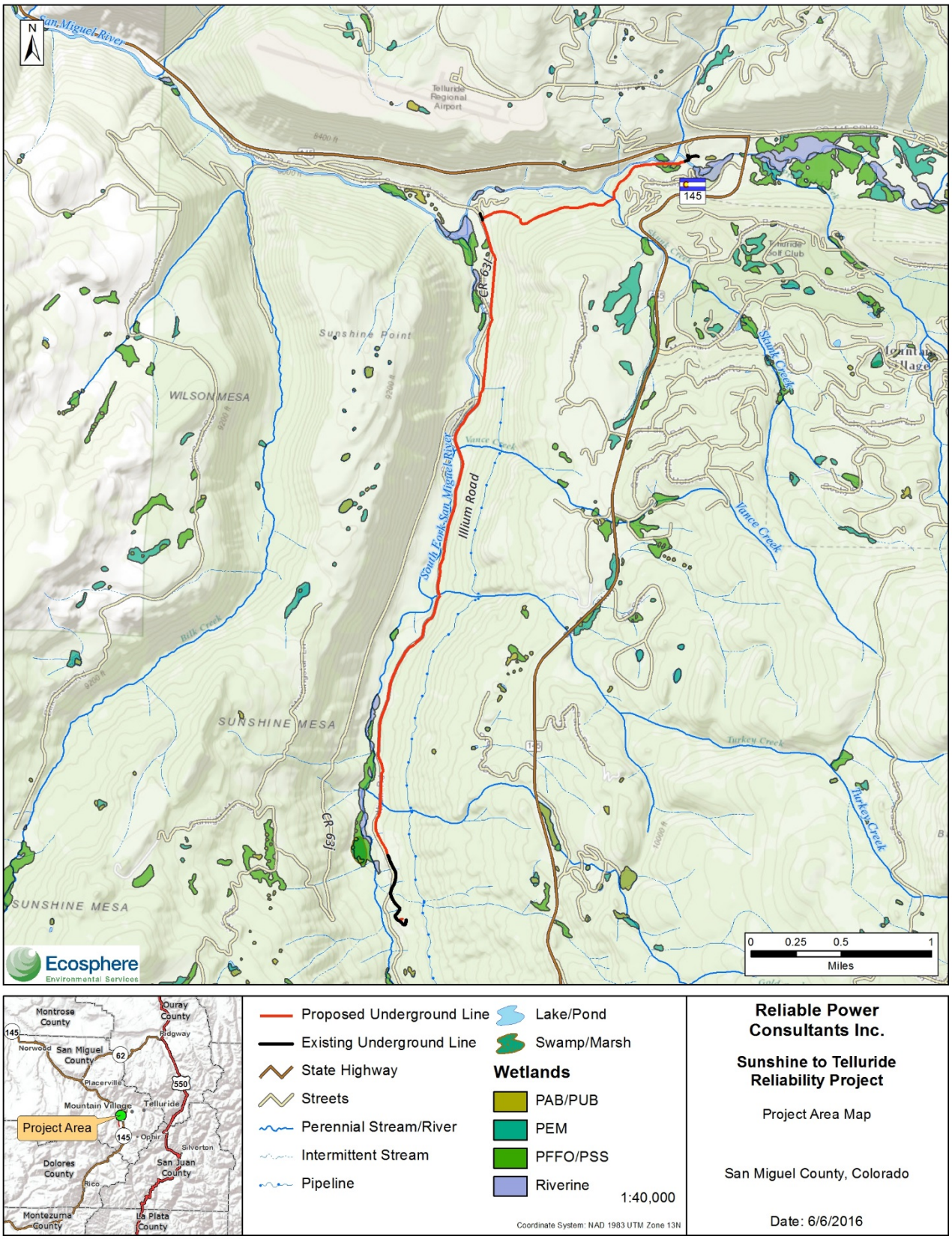

Figure B-2. Project Area Map

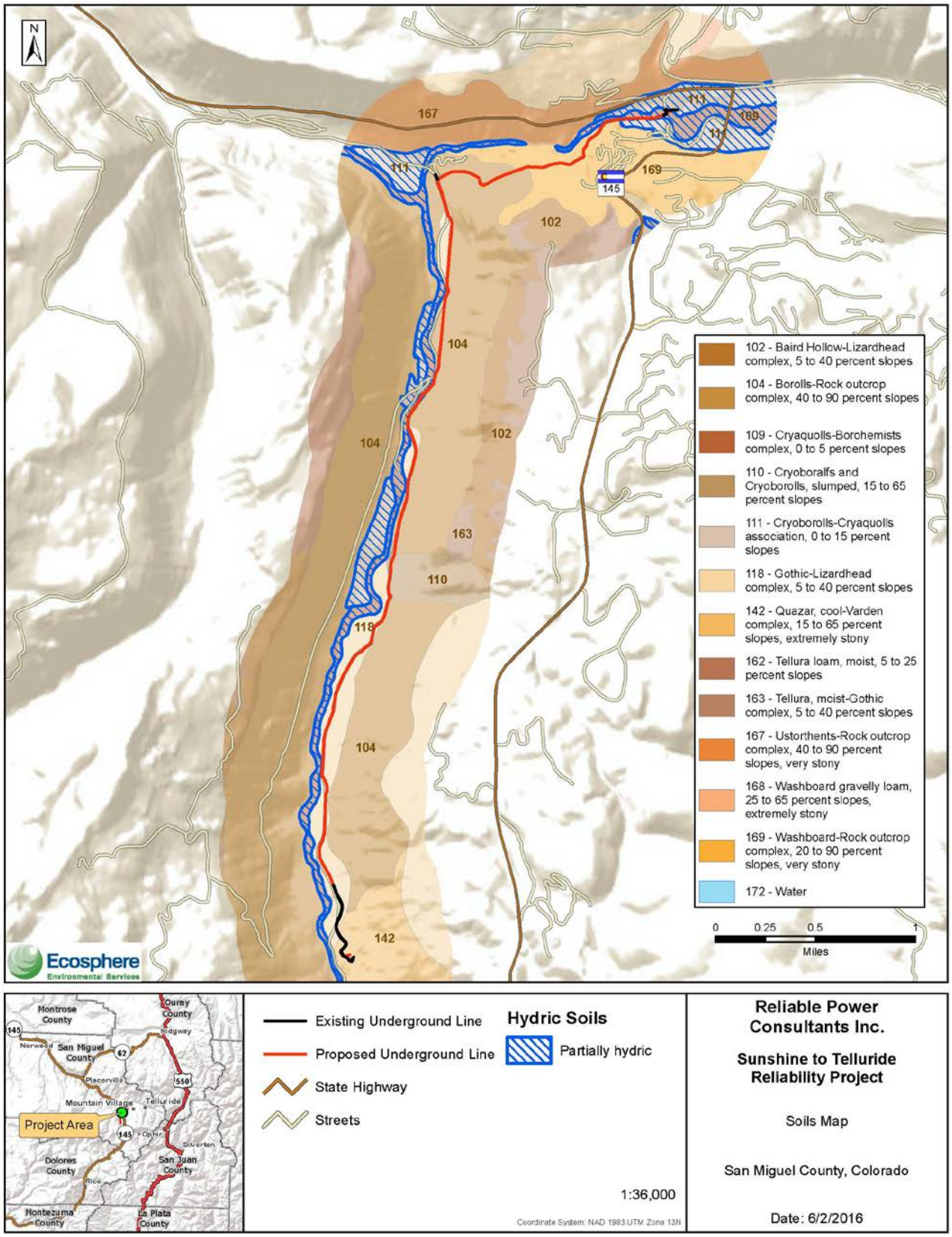

Figure B-3. Soils Map

Appendix C – Wetland Determination Forms

Appendix D – Photographs

Photograph D-1. San Miguel River with streamside terrace

Photograph D-2. Perennial Creek #1 looking east

Photograph D-3. Skunk Creek looking west at the bridge

Photograph D-4. Turkey Creek looking west at Ilium Road

Photograph D-5. Intermittent Creek #1 looking west at Ilium Road

Photograph D-6. Ilium Road Spring

Photograph D-7. Galloping Goose Trail looking south at the sedge wetland

Photograph D-8. Riparian Shrubland Encroaching on the Galloping Goose Trail

Photograph D-9. Coyote Willow Roadside Ditch along Ilium Road looking north

Photograph D-10. Perennial Creek #4 Fringe Wetland looking east

Appendix E – Plants Observed

Appendix Table E-1. Plants Observed During Survey

Scientific Name	Common Name	Wetland Indicator Status[1]
???		
Picea engelmannii	Engelmann spruce	UPL
Shrubs		
Chrysothamnus viscidiflorus	yellow rabbitbrush	UPL
Lonicera involucrata	twinberry honeysuckle	FAC
Ribes lacustre	prickly currant	FAC
Rosa woodsii	wood's rose	UPL
Salix exigua	coyote willow	FACW
Salix planifolia	diamondleaf willow	OBL
Graminoids		
Bromus inermis	smooth brome	UPL
Carex sp.	sedge	OBL
Juncus balticus	Baltic rush	FACW
Phalaris arundinacea	reed canarygrass	FACW
Phleum pratense	timothy	FAC
Poa pratensis	Kentucky bluegrass	FAC
Forbs		
Achillea millefolium	common yarrow	FACU
Artemisia ludoviciana	white sagebrush	FACU
Cirsium arvense	Canada thistle	FACU
Maianthemum sp.	false lily of the valley	FAC
Plantago major	common plantain	FAC
Potentilla sp.	cinquefoil	N/A
Taraxacum officinale	common dandelion	FACU
Verbascum thapsus	common mullein	FACU

[1]OBL = Obligate Wetland (hydrophyte); occurs in aquatic resources > 99% of time
FACW = Facultative Wetland (hydrophyte); occurs in aquatic resources 67-99% of time
FAC = Facultative (hydrophyte); occurs in aquatic resources 34-66% of time
FACU = Facultative Upland (Nonhydrophyte); occurs in aquatic resources 1-33% of time
UPL = Obligate upland (nonhydrophyte); occurs in uplands > 99% of time
NI = indicator status not known in this region
(Lichvar et al. 2014)

Appendix F – Aquatic Resources Excel Spreadsheet

A Cultural Resource Inventory for San Miguel Power Association's Proposed Telluride Reliability Project on Private Lands in San Miguel County, Colorado

Prepared by:

Doug Loebig, SEAS Principal Investigator
Stratified Environmental & Archaeological Services, LLC
P.O. Box 1078 (210 Goddard Avenue)
Ignacio, CO 81137
(970) 563-4615

Prepared for:

Stephni Balzly
Reliable Power Consultants, Inc.
190 Turner Drive, Unit E
Durango, CO 81301
(970) 259-1709

State of Colorado Permit No. 2016-55
SEAS Report No. 16-101
December 2016

Abstract

On November 2, 2016, Stratified Environmental & Archaeological Services, LLC (SEAS) completed a cultural resource inventory for San Miguel Power Authority's (SMPA) proposed Telluride Reliability Project, an underground distribution line crossing private land in San Miguel County, Colorado. Forest Service portions of the project are being addressed by Uncompahgre National Forest (UNF) archaeologists in a separate report. The cultural resource inventory was conducted at the request of Stephni Balzly, Reliable Power Consultants on behalf of SMPA. The project is located in the deep mountain valleys of the South Fork San Miguel River and the San Miguel River southwest and west of Telluride, Colorado. The purpose of the project is to install looped backup electrical feed to SMPA's electrical system, which will provide more reliable electrical service to Telluride, Mountain Village, and Telluride Ski Resort. Doug Loebig of SEAS completed the cultural resource inventory under State of Colorado Permit No. 2016-55. The undertaking is the issuance of a Nationwide Permit. Since portions of the project would affect waters of the United States, the project proponent must meet requirements of Section 404 of the Clean Water Act and/or Section 10 of the Rivers and Harbors Act, and is, therefore, seeking a permit from the USACE. The cultural resource inventory was performed to comply with Section 106 of the National Historic Preservation Act (P.L. 59-209) at the request of the Army Corps of Engineers. The area of potential effect and the total area surveyed is approximately 7.69 acres (3.11 ha).

The cultural resource inventory for SMPA's proposed Telluride Reliability Project encountered and documented two newly recorded segments (5SM 2030.35 and 5SM 2030.36) of the Rio Grande Southern Railroad (5SM 2030). Both of the segments date from 1890 to 1952, when the railroad was abandoned. As a whole, site 5SM 2030 is considered an NRHP-eligible linear cultural property under Criteria A & B, as previously and officially determined in 1993. Both site segments 5SM 2030.35 and 5SM 2030.36 are considered non-contributing to the NRHP eligibility as they lack sufficient integrity. In terms of management recommendations, no further cultural resource work is recommended at site segments 5SM 2030.35 and 5SM 2030.36. Therefore, cultural resource clearance for the project to proceed is recommended as no significant or potentially significant cultural properties will be affected.

Table of Contents

Page

1. 0 INTRODUCTION 1

2. 0 PROJECT DESCRIPTION 1

3. 0 ENVIRONMENTAL SETTING 5

3.1 Climate, Geology, and Soils 5
3.2 Vegetation 6

4.0 CULTURAL OVERVIEW AND PREVIOUS INVESTIGATIONS 7

4.1 Cultural Overview 7
4.1.1 Paleo-Indian Era 7
4.1.2 Archaic Era 8
4.1.3 Formative Era 8
4.1.4 Proto-historic Era 9
4.1.4.1 Ute Prehistory and Archaeology 9
4.1.4.2 Ute History 10
4.1.5 European American Settlement 11
4.2 Research Objective 12
4.3 Previous Investigations 13
4.4 Methodology and Definitions 15
4.5 Protection and Evaluation of Cultural Resources 16

5.0 RESULTS 17

5.1 Newly Recorded Linear Site Segments 17
5.1.1 Site Segment 5SM 2030.35 17
5.1.2 Site Segment 5SM 2030.36 23

6.0 CONCLUSIONS AND RECOMMENDATIONS 29

7.0 REFERENCES CITED 29

List of Figures

Page

Figure 2.1 General Project Vicinity Map 2

Figure 2.2 Project Location Map 1: Greyhead, CO 1953 USGS 7.5' Series Quadrangle 3

Figure 2.3 Project Location Map 2: Greyhead, CO 1953 USGS 7.5' Series Quadrangle 4

Figure 4.1 View Southwest towards Historic Ilium Power Plant Site (5SM 4617); Proposed Underground Distrbution Line Will Be Placed in Existing, Disturbed Modern Power Line Corridor at Far Left 14

Figure 5.1 Site Segment Plan Map, 5SM 2030.35 19
Figure 5.2 View West from East End(Top) and Interpretive Sign on Trail (Bottom), Site Segment 5SM 2030.35 20
Figure 5.3 View Southwest in Midsection (Top) and View Southwest at Confluence with Keystone Gorge Trail (Bottom), Site Segment 5SM 2030.35 21
Figure 5.4 View North of Modern Trail Bridge Over Skunk Creek, Site Segment 5SM 2030.35 22
Figure 5.5 Site Segment Plan Map, 5SM 2030.36 24
Figure 5.6 View Northeast from Northeast End (Top) and View Southwest with FR 625 at Right (Bottom), Site Segment 5SM 2030.36 25
Figure 5.7 View Southwest of Site Segment 5SM 2030.36 Crossing of FR 625 towards Galloping Goose Trailhead Parking Area (Top) and Interpretive Sign at Trailhead (Bottom), 5SM 2030.36 26
Figure 5.8 View of Modern Footbridge on South Fork San Miguel River Facing Northwest, 5SM 2030.36 27

List of Tables

Page

Table 2.1 Project Area Information 5
Table 3.1 Weather Data at the Telluride 4 WNW, Colorado Climate Station from 1900 to 2016 (Station 058204) 6
Table 5.1 Site Segment Summary Table 17

1.0 Introduction

On November 2, 2016, Stratified Environmental & Archaeological Services, LLC (SEAS) completed a cultural resource inventory for San Miguel Power Authority's (SMPA) proposed Telluride Reliability Project, an underground distribution line crossing private land in San Miguel County, Colorado. Forest Service portions of the project are being addressed by Uncompahgre National Forest (UNF) archaeologists in a separate report. The cultural resource inventory was conducted at the request of Stephni Balzly, Reliable Power Consultants on behalf of SMPA. The project is located in the deep mountain valleys of the South Fork San Miguel River and the San Miguel River southwest and west of Telluride, Colorado. Doug Loebig of SEAS completed the cultural resource inventory under State of Colorado Permit No. 2016-55. The undertaking is the issuance of a Nationwide Permit. Since portions of the project would affect waters of the United States, the project proponent must meet requirements of Section 404 of the Clean Water Act and/or Section 10 of the Rivers and Harbors Act, and is, therefore, seeking a permit from the USACE. The cultural resource inventory was performed to comply with Section 106 of the National Historic Preservation Act (P.L. 59-209) at the request of the Army Corps of Engineers. The cultural resource inventory encountered and documented two newly recorded segments of an historic linear site (5SM 2030.35 and 5SM 2030.36), the Rio Grande Southern Railroad.

2.0 Project Description

The Telluride area has undergone extensive growth in the past 30 years, having grown from a small mountain community with a modest ski area into the Towns of Telluride and Mountain Village, a famous national and international destination known for its ski resort in the winter and an extensive festival schedule during the summer. Accordingly, the electric loads in the area have grown significantly. SMPA has made additions and modifications to the electric system to serve the increased demand for electricity. A recent upgrade of the transmission system provided looped (redundant) transmission feeds to the Sunshine substation but permit restrictions left the Telluride substation on a radial transmission line with limited backup. Providing a redundant or backup feed to the Telluride substation is a high priority for SMPA and will allow them to reliably serve Telluride, Mountain Village, and Telluride Ski Area. The proposed project will provide the necessary redundant system to alleviate costly power outages, such as the 2-day outage recently experienced by these communities.

The proposed Telluride Reliability Project will consist of an underground power line and fiber optic cable that stretches from the existing Sunshine Substation on UNF lands and follows just east of Forest Road (FR 625) (known locally as the "Ilium Road') to near the confluence of the South Fork San Miguel River and the San Miguel River. From there, the proposed line will head north along an existing power line and trail ("Galloping Goose Trail"; 5SM 2030) corridor to the existing Telluride Substation, which is located on private land. Neither of the substations will be expanded for this project. It should be noted the adjacent power lines are less than 50 years old, as evidenced by construction and inspection tags. Total length of the project is approximately 4.6 miles, although only 3.17 miles is on private land. The portion on private land includes two sections; Section 1 is 5,096 linear feet and Section 2 is 11,647 linear feet. The proposed easement width is 20 feet. The area of potential effect (APE) and the total area surveyed is approximately 7.69 acres (3.11 ha). Disturbance levels within the 20-foot wide easement are expected to be high, with mechanical trenching, installation, backfilling, compacting, and reclamation activities

Figure 2.1 General Project Vicinity Map

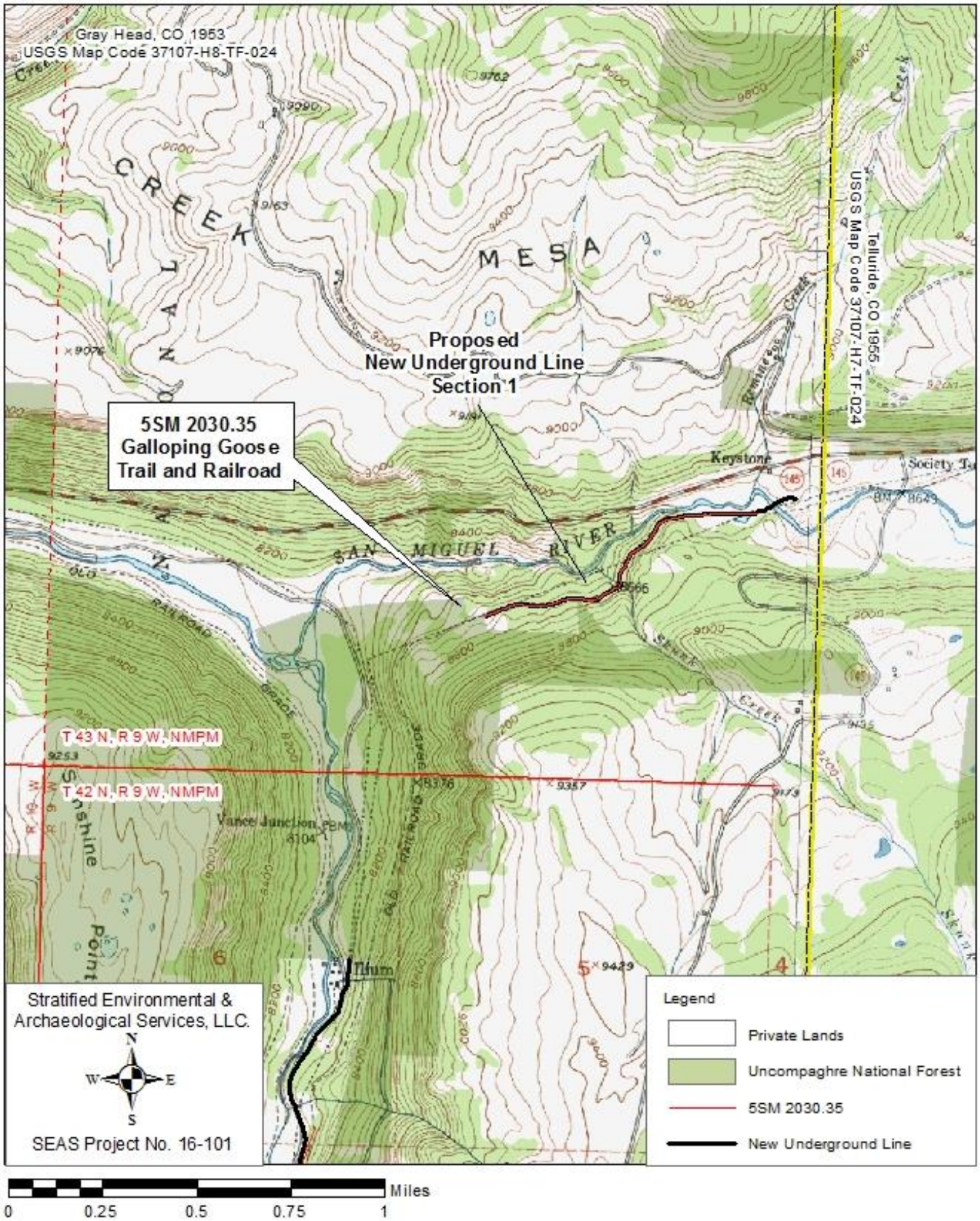

Figure 2.2 Project Location Map 1: Grey Head, CO 1953 USGS 7.5' Series Quadrangle (1: 24,000 Scale)

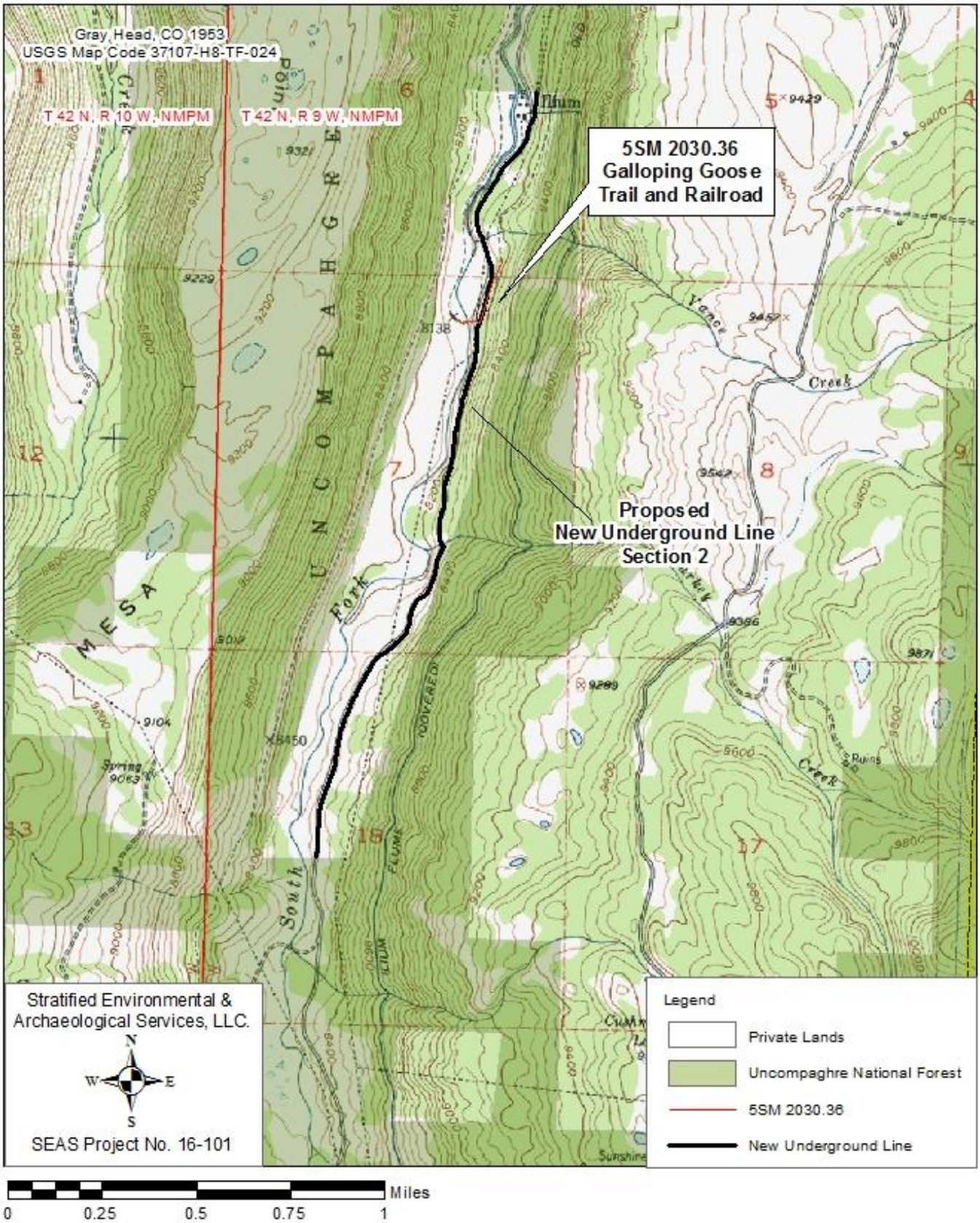

Figure 2.3 Project Location Map 2: Grey Head, CO 1953 USGS 7.5' Series Quadrangle (1: 24,000 Scale)

Table 2.1 Project Area Information

San Miguel Power Authority's Proposed Telluride Reliability Project (SEAS Report No. 16-101)	
Project Legal Description:	E/2, NW/4 and NE/4, SW/4 of Section 18 W/2, NE/4; W/2, SE/4; and SE/4, SW/4 of Section 7 N/2, SE/4 and SW/4, SE/4 of Section 6 Township 42 North, Range 9 West, NMPM Unplatted portions of Township 43 North, Range 9 West, NMPM Private Lands in San Miguel County, Colorado
USGS 7.5' Series Quadrangle Maps:	Gray Head, CO 1953 USGS Map Code 37107-H8-TF-024
Project Dimensions	Section 1 = 5,096 ft x 20 ft Section 2 = 11,647 x 20 ft
Area of Potential Effect (APE)	7.69 acres (3.11 ha)

anticipated. Project location information and other details are provided in Table 2.1. The route was selected, and approved, to minimize visual impairments of this scenic mountain setting and follows existing disturbance corridors throughout its length.

3.0 Environmental Setting

Elevation in the project area ranges from 8,160 feet (2,259 m) amsl at the north end of Section 2 of the project to 8,640 ft (2,304 m) at the east end of Section 1 of the project. The project area is located in the San Miguel River Valley (Section 1) and the South Fork San Miguel River Valley (Section 2). The San Miguel River is a major tributary of the Dolores River, which is a major tributary of the Northern Colorado River Basin. Current and historic land use in the project vicinity includes mining, irrigated agriculture, livestock grazing and ranching, woodcutting, rural and suburban residential areas, and recreational activities such as backcountry, Nordic, and alpine skiing, mountain biking, fishing, and hunting.

3.1 Climate, Geology, and Soils

The nearest settlement for which historical climate records are available is from the Telluride 4 WNW Station (Station 058204) for the period 1900 to 2016 (WRCC 2016). Table 3.1 summarizes climatic data from the station. Average annual maximum temperature at the Telluride 4 WNW climate station is 55.8° F and average annual minimum temperature is 23.3° F for the same period. The contracted frost-free growing season lasts from 40 to 70 days. Average annual total precipitation is 23.09 inches and average total snowfall is 167 inches. June and December are the driest months of the year, ranging from 1.16 inches in June to 1.54 inches in December. July and August are the wettest months of the year, ranging from 2.44 inches in July to 2.91 inches in August (WRCC 2016).

Table 3.1 Weather Data at the Telluride 4 WNW, Colorado Climate Station from 1900 to 2016 (Station 058204)

Average	Jan	Feb	Mar	Apr	May	Jun	Jul	Aug	Sep	Oct	Nov	Dec	Annual
Maximum Temp. (F°)	37.2	39.5	43.3	52.0	61.8	72.3	76.9	74.2	68.8	59.1	46.5	38.1	55.8
Minimum Temp. (F°)	5.2	8.4	14.2	22.7	29.9	35.5	41.5	40.9	34.3	25.5	14.9	6.8	23.3
Total Precip. (in)	1.63	1.69	2.16	2.20	1.76	1.16	2.44	2.91	2.13	1.92	1.55	1.54	23.09
Total Snowfall (in)	27.6	25.4	30.9	21.1	6.5	0.7	0.0	0.0	1.0	9.0	20.6	24.2	167

Throughout the Northern Southwest, the marked increase in precipitation during late summer is caused by a monsoonal circulation pattern. This pattern originates when the hemisphere warms up in summer and shifts the westerlies and sub-polar lows northward. This places a high pressure cell (the Bermuda High) over the central United States. The western edge of the Bermuda High rotates clockwise sending moisture laden air into the Southwest from the Gulf of Mexico. The convective air currents created by the hot lowland deserts and the convergence of the moist air masses with the cooler highland air often creates powerful afternoon thunderstorms from mid to late summer (Sellers and Hill 1974; Gillispie 1985: 14-15).

The San Juan Dome was initially formed by tectonic shifts, episodic uplifts, and related volcanism that occurred during Late Cretaceous times, known as the Laramide Orogeny (Aubrey 1991: B21). Surface geology consists of the Cretaceous Dakota Sandstone – Burro Canyon Formation (Twedo 1979). The Dakota Sandstone and Burro Canyon Formations are Lower Cretaceous in age and comprised of marine and non-marine deposits from an overall transgression of a vast inland sea (Aubrey 1991). Soils consist of dark gray brown to dark brown silt loam to gravelly loam colluvial and alluvial soils with a rich organic layer in the A Horizon.

3.2 Vegetation

The project area is characterized by upper montane zone, mixed coniferous-deciduous forest habitat. Vegetation cover generally ranges from 80 to 100 percent. The overstory is primarily composed of Engelmann spruce (*Picea engelmannii* (Parry) Engelmann), subalpine fir (*Abies lasiocarpa* (Hooker) Nuttall), and aspen (*Populus tremuloides* Michaux) trees. In riparian zones, long-leaved cottonwood (*Populus angustifolia* James) is the dominant tree species Common species in the understory and meadow openings include nodding brome (*Bromus anomalus* Ruprecht ex Fournier), shrubby cinquefoil (*Potentilla fruticosa* L.), wild strawberry (*Fragaria vesca* L.), pussytoes (*Antennaria* spp.), cinquefoil (*Potentilla* spp.), yarrow (*Achillea lanulosa* Nuttall), Wood's rose (*Rosa woodsii* Lindley), smooth brome (*Bromus inermis* Leyss.), fescue (*Festuca* sp.), mountain snowberry (*Symphoricarpos oreophilus* Gray), creeping Oregon grape (*Mahonia repens* (Lindley) Don), mountain lover (*Paxistima myrsinites* (Pursh) Rafinesque), and kinnikinnick (*Arctostaphylos adenotricha* (Fernald & Macbride) Love & Love).

4.0 Cultural Overview and Previous Investigations

4.1 Cultural Overview

The project area is within the Northern Colorado River Basin (NCRB) and the cultural history summary follows the divisions detailed in *Colorado Prehistory: A Context for the Northern Colorado River Basin* (Reed and Metcalf 1999). Through time, the NCRB region has been occupied by a wide variety of cultural traditions including Paleo-Indian, Archaic, Formative (Ancestral Pueblo, Fremont, Aspen, and Gateway traditions), Protohistoric (Numic), Ute, and European American. The prehistory of the region is referenced in terms of archaeological units including traditions, periods, and phases (Reed and Metcalf 1999: 5).

4.1.1 Paleo-Indian Era

Paleo-Indian occupation of the region first occurred during the late Pleistocene (ca. 11,500 to 6500 BC). Archaeological evidence suggests these peoples had developed a highly specialized and mobile subsistence strategy mainly focused, at least initially, on large, extinct Pleistocene megafauna, such as mammoth, bison, and ground sloth. Archaeological remains of these cultures often contain spear points in association with bones of extinct megafauna and other game. The Paleo-Indian tradition in the NCRB may include four traditions based mainly on projectile point styles, such as the Clovis tradition, Goshen tradition, Folsom tradition, and the Foothill-Mountain tradition. Clovis (ca. 11,500 to 10,500 BC) sites are recognized by two varieties of spear points. Both point types have a general lanceolate shape, relatively short flutes, concave bases, with heavy basal and lateral grinding. Type 1 is generally longer than Type 2, while Type 2 points are more triangular with slightly longer flutes. A variety of other tool types are present in Clovis assemblages, including spurred end-scrapers, large unifacial side scrapers, flaked knives, backed worked blades, gravers, and perforators. Bone tools recovered from Clovis sites often consist of points, foreshafts, awls/punches, scrapers, fleshers, and shaft wrenches/batons. Most excavated Clovis sites occur in association with mammoth remains, though bones of bison, horse, camel, cervid, tapir, canid, antelope, bear, and jackrabbit have also been reported. With few exceptions, most of the Clovis sites documented are kill sites that may not fully reflect the tool kits and subsistence strategies employed by these early inhabitants (Cordell 1984: 129-133).

Folsom sites (ca. 10,500 to 9,500 BC) are primarily recognized by spear points with long flutes formed by the removal of a longitudinal channel flake and a lanceolate form with broader shoulders. Other tool types commonly encountered at Folsom sites include end scrapers, bifacially prepared cores, bifacial knives, denticulates, backed flake tools, composite tools, burins, gravers, bone/antler tine flakers, needles, beads, and incised discs. Associated fauna represented at Folsom kill and processing sites usually include large, extinct forms of bison, although as in Clovis, a variety of other fauna can be represented, particularly antelope, canids, and jackrabbits. Folsom kill sites tend to have fewer bison represented than Late Paleo-Indian kill sites, although in the Southwest, the majority of Folsom sites identified are probably campsites and not kill sites (Cordell 1984: 133-134). Plano tradition sites (ca. 9,500 to 5,500 BC) are best represented on the Great Plains, but are generally identified by stemmed to lanceolate spear points.

Paleo-Indian sites are infrequent in the region, although this may be partially due to the lack of diagnostic artifacts on surface scatters, site re-use, and amateur point collectors. Much of the data is comprised of survey statistics with complete reliance on projectile point typologies. One hundred and seventy-one Paleo-Indian components (or 1% of the total) have been identified within the NCRB. Of the 171 identified Paleo-Indian components, only 4 have been excavated and dated chronometrically (Reed and Metcalf 1999:52, 57).

4.1.2 Archaic Era

The Archaic era (ca. 6,400 to 400 BC) is characterized by a period in which subsistence systems became more localized and generalized in response to extinction of the Pleistocene megafauna. The Archaic corresponds with the end of the Pleistocene and corresponds with a change from cool and moist conditions to the increasingly warmer and drier climate of the Holocene. Subsistence strategies were focused on a wider variety of resources including big and small game, birds, fish, and plants. A technological shift occurred during this period, reflecting food processing and storage techniques required for the subsistence change. However, there is substantial evidence that Archaic adaptive strategies were utilized by Paleo-Indian cultures west of the plains (Reed and Metcalf 1999: 71). Technological shifts are not the only major changes, as settlement patterns indicate migration into areas not formerly occupied. The Archaic is characterized by the exploitation of a much wider variety of landforms and life zones, such as high desert, canyon-mesa, riparian, montane, and subalpine/alpine environments. Through the Archaic era, population density tends to track the incremental technological innovations, such as plant food grinding equipment and storage techniques, which ultimately increased the human carrying capacity of the local environment.

In the Northern Colorado River Basin, the Archaic era has been subdivided into four periods, including the Pioneer, the Settlement, the Transitional, and the Terminal periods, though Reed and Metcalf (1999:77) acknowledge this approach may be insufficient and an analysis of temporal and spatial trait distributions may be more productive. Questioning whether one sequence will ever be adequate, they state that it is more likely that several major sub-areas will favor differing sequences as archaeological data accumulates. Projectile point styles vary widely and are not, by themselves, good indicators of cultural affinity. Point styles should be considered in conjunction with other technological attributes, including architecture, feature types, cooking techniques, and food storage.

In the NCRB, 1,316 (or 10 %) of the total components can be attributed to the Archaic era. The Archaic is the most common of the culturally identified components, although 10,238 (or 74%) components have been identified as unknown prehistoric (Reed and Metcalf 1999: 52).

4.1.3 Formative Era

The Formative era is characterized by a shift to mixed horticultural subsistence systems, habitation structures, and a trend towards high-quality ceramics (Reed and Metcalf 1999: 98). The Formative era has been split into four overlapping/contemporaneous archaeological cultures within the NCRB, including the Ancestral Pueblo, the Fremont, the Gateway, and the Aspen traditions. The Aspen tradition is not well defined and is a mountain-based adaptation paralleling the Uinta phase of the Wyoming Basin (199: 141). The Fremont tradition is well documented in the northern portion of the NCRB extending into most

of Utah. The Gateway tradition could be just another regional deviation of Fremont culture, notorious for its variability (e.g., see Pierson 1980; Croll and Lamore 2009: 8). The Gateway tradition was proposed by Reed (1997) to define problematical site types in western Colorado distinct enough from the Fremont and Ancestral Pueblo culture areas to warrant separate cultural classification. These sites suggest groups are becoming more sedentary but with limited reliance on horticulture when compared to the Fremont and Ancestral Pueblo traditions. Other traits of the Gateway tradition include pitstructure and small roomblock architecture of short occupancy, tradeware ceramics from Ancestral Pueblo and Fremont sources in the complete absence of a local pottery tradition, rock art elements similar to both Fremont and Ancestral Pueblo styles, and Rosegate and other corner-notched projectile point types. In the Disappointment Valley region, the Formative era appears solely represented by Ancestral Pueblo groups. However, permanent habitation sites are lacking in the project region and the cultural resources indicate only limited use of the area by the Ancestral Pueblo, primarily for upland resource procurement and processing as short-term open camps are the most common site type found (DeFrancia and Kinnear-Ferris 2005).

One hundred and fifty-five of the identified components (or 1%) are attributed to the Ancestral Pueblo tradition in the NCRB. A total of 444 components (3%) have been assigned to the Fremont tradition, 575 (4%) to the Late Prehistoric, and 144 (1%) components have been assigned as unspecified Formative.

4.1.4 Proto-historic Era

The period between the demise of the Formative cultures and the removal of the Utes from their once vast lands to reservations in AD 1881 is referred to as the Proto-historic era in the NCRB. The principal occupation of the NCRB during this time was by the Ute Indians, although the Fremont tradition may have continued in northern and western Colorado until approximately AD 1500 (Reed and Metcalf 1999:146). In the NCRB, 748 proto-historic components have been recorded (5%), although none were identified within the project area.

4.1.4.1 Ute Prehistory and Archaeology

The timing of the Ute Indian occupation of southwestern Colorado is not well understood. Sites that can be positively attributed to the Ute Indians are generally lacking, but are undoubtedly present. The non-recognition of Ute sites is probably due to their extreme mobility, particularly following the adoption of an equestrian lifestyle, and the correspondingly diffuse archaeological remains, the lack of diagnostic artifacts attributable to southwestern Colorado Ute Indians, and the focus of professional archaeologists on the more recognizable Ancestral Pueblo and Navajo sites.

Two phases of the Ute cultural tradition have been defined for the Northern Colorado River Basin, which do not appear to be well represented in southwestern Colorado. The Canalla phase refers to a pedestrian hunting and gathering aboriginal culture (Reed 1994). Canalla Phase (ca. AD 1100 to 1650) sites are distinguished by the appearance of Uncompahgre Brownware. The Uncompahgre Brownware ceramic tradition includes a plain type and a finger-impressed type. It is still unclear if the construction method is coil and scrape or paddle and anvil (Reed and Metcalf 1999: 158). Projectile points typically associated with these sites include Desert Side-notched and Cottonwood Triangular point types, both of which are common throughout the Great Basin and Southwest during late prehistoric/protohistoric times. Evidence of wikiups and other brush structures are frequently encountered at Canalla phase sites. Reed (1994)

contends that the appearance of Uncompahgre Brownware marks the arrival of the Ute or their ancestors into western Colorado from the Great Basin. The Antero phase (ca. AD 1650 to 1881) marks the transition from a pedestrian hunting and gathering society to an equestrian life style following the introduction of the horse by the Spanish. European trade goods begin to appear in Ute material culture, but in low infrequent quantities, particularly glass beads, metal cone tinklers, cartridges, and tin cans. Uncompahgre Brownware was still produced. Desert Side-notched and Cottonwood Triangular projectile points are also manufactured during the Antero phase, but are eventually replaced by metal points and European goods, including firearms (Reed 1994). While the tipi is adopted following the inception of the horse, wikiups were still constructed (Reed and Metcalf 1999).

4.1.4.2 Ute History

The Ute Indians were formed into at least seven bands at the time of historic contact. The Southern Ute Indians consist of three bands, including the Mouache and Capote bands, currently located on the Southern Ute Indian Reservation, and the Weeminuche band, currently located on the Ute Mountain Ute Indian Reservation. Historically, the Capote band inhabited the area east of the Continental Divide to the Sangre de Cristos, the San Luis Valley, and as far south as Chama and Tierra Amarilla, New Mexico region. The Mouache band lived in areas east of the Culebra and Sangre de Cristo Mountains and from the Trinidad to Denver areas along the Front Range (Schroeder 1965:54). The Weeminuche band inhabited the region of southwestern Colorado west of the Continental Divide, to the Abajo Mountains and canyon country of southeastern Utah, and from the Uncompahgre River in the north to the San Juan River in the south (Park et al 1938: 632). The Weeminuche band, unlike the Capote and Mouache bands, often had amiable relationships with the Navajo Indians. The Weeminuche band was reported to be living among the Navajo near the Carrizo Mountains in 1818, and frequently participated in raiding excursions together. In 1833, Navajos were reported to be living among the Weeminuche in the La Plata River and Ute Mountain vicinity (Schroeder 1965: 64). The peaceful interactions between the Navajo and Weeminuche and the likely adoption of cultural traits between the two groups has probably further obscured the ability of archaeologists to distinguish Ute and Navajo ethnicity from the non-perishable material culture of the archaeological record.

The earliest historical reference to the Ute Indians is in 1626, when the Jemez Pueblo Indians told the Spaniards the Ute visited the area prior to Spanish settlement in 1598. The Spanish waged war on the Ute between 1637 and 1641, for unknown reasons, and 80 Ute Indians were captured and used as slave labor in Santa Fe. By 1670, following the adoption of the horse and the rise of the tribe as a formidable force, the Spanish arranged their first treaty with the Ute (Schroeder 1965: 54). However, intermittent Ute raiding parties, particularly the Mouache and Comanche alliance, hampered the settlement of northern New Mexico and southern Colorado until the United States took control of the territory in 1848, after the Treaty of Guadalupe Hildalgo was signed with Mexico. However, conflicts with the Ute Indians apparently continued as the governor of New Mexico arranged the Treaties of Abiquiu with the Ute in 1855, whereby the Ute relinquished all territory in New Mexico with the exception of that area north of the San Juan River (Callaway et al 1986: 355). Due to increasing encroachment by Anglo and Hispanic settlers and subsequent conflicts with the Ute near Colorado City and the San Luis Valley, the Treaty of 1868 redefined the territory of the seven Ute bands and restricted them to the western third of Colorado. The Colorado Gold Rush began with the discovery of gold in the Colorado Springs and Denver area in 1859. By 1860, miners had found rich mineral deposits in the San Juan Mountains. Miners kept pouring into the region despite the Treaty of 1868 and by 1874 the United States had forced the Ute bands to sign

another treaty, whittling the original Ute Reservation down to two narrow strips of land along the Colorado-Utah and Colorado-New Mexico borders (Delaney 1974: 52-55). Following the Meeker Massacre of 1879, the Northern Ute bands were forced from Colorado to remote lands in eastern Utah and the Southern Ute lands were again reduced to a small strip of land along the Colorado-New Mexico border. In 1894, the Hunter Act was passed, leading to the privatization of Indian lands. The Weeminuche had not signed the treaty as had the Capote and Mouache bands, and the Weeminuche were eventually given the western half of the remaining reservation lands (Ute Mountain Ute Indian Reservation). The checkerboard of land ownership that resulted from private allotments of the Capote and Mouache land on the east half of the reservation (Southern Ute Indian Reservation) was partially restored in 1937, when previous land holdings of some 222,016 acres of the original 523,079 acres not allotted (and sold to European settlers at $1.25 an acre) were returned back to the Ute (Delaney 1974: 67-79).

4.1.5 European American Settlement

By 1859, the presence of gold was confirmed in the mountains of Colorado. In 1861, miners had crossed the Continental Divide and entered the San Juan Mountains. Placer mining, a low investment technique based on exploiting surface gravel deposits with pans, shovels, picks, and sluice boxes, was the primary mining technique employed throughout most of the 1860s. Miners established Animas City, just north of present-day Durango in 1861, for processing gold from ore. By the late 1860s, high investment lode mining (underground) was established due to limited and dwindling placer mine deposits, which required heavy machinery, a large work force, transportation, and processing mills (Husband 1984: 20, 27). By 1874, stimulated by the mining activity, small communities at the gateways of the San Juan Mountains were springing up in Silverton, Lake City, Del Norte, Telluride, Parrott City, and Animas City. The mining operations were in desperate need of mills, smelters, and efficient transportation, problems that were cured by the railroads. Due to disagreements with the inhabitants of Animas City, the Denver & Rio Grande (D&RG) railroad created the town of Durango in 1880 to use as a railroad hub, which was also strategically located near substantial coal deposits. By 1882, the D&RG linked Antonito in the San Luis Valley with Pagosa Springs, Durango, and Silverton. Within several months, the population of Durango swelled to 2,500 people and the town became a financial, business, and agricultural center that supported the regional mining operations. Gold had lured the miners into southwestern Colorado, but silver was the primary source of mineral wealth generated, with gold, copper, lead, and zinc recovered as by products. Silver mining was dealt a permanent and devastating blow throughout Colorado during the market crash and depression beginning in 1893 (Smith 1996: 234-246).

By the mid-1870s, the Sheridan Mine had found substantial lode deposits and a major tent camp soon flourished that was originally called Colombia. This rowdy mining camp was renamed Telluride 1878 and swelled to almost 5,000 inhabitants, but later contracted to a few hundred people by the mid-20th Century. The Rio Grande Southern Railroad was built by Otto Mears, a Russian immigrant who served in the Union Army before coming out West. Mears had built a number of toll roads over the San Juan Mountains and had become a successful entrepreneur in the region. His first railroad, the Silverton Railroad (later dubbed the 'Rainbow Route') went from Silverton up Mineral Creek to Albany for access to the lucrative Red Mountain mining district. The Silverton Railroad was completed in 1889. In 1890, he quickly turned his attention and investment into building the Rio Grande Southern Railroad. Work on this narrow gauge line began in 1890 and would connect Durango with Ridgeway. The railroad reached Telluride and the Pandora Mine by 1891. Demonetization of silver and the resulting crash of silver prices

in 1893 hit the mines and early railroads particularly hard and Otto Mears' Rio Grande Southern Railroad business began to fail. The Denver & Rio Grande Railroad bought the majority interest in the Southern Rio Grande Railroad soon after and retained it as a subsidy. Coal and lumber shipments, as well as tourism kept the railroad in business through the changing economic times of the early 20th Century (Frazer and Strand 1997). In 1931, the Rio Grande Southern Railroad began to utilize more light-weight hybrid trains to cut costs for hauling lighter freight, such as mail and tourists. These hybrid trains were nicknamed the 'Galloping Goose' and were operated until 1952, when the railroad went out of business as it could no longer compete with automobiles and highway truck shipping.

The need for substantial coal mining in the region was initiated by the expanding railroad system. The La Plata Coal Field, including parts of La Plata, Montezuma, Dolores, and San Miguel Counties, became developed during this period. Further economic stimulation came from the lode mining operations, which required a major fuel source for their extensive smelting needs. Coke oven operations soon appeared in Rico and Durango, followed by similar ventures in nearby Hesperus and Perins. By 1920, the value of coal production in the region surpassed that of mineral mining. A depression in coal related production occurred from 1923 to 1945 throughout the United States (Husband 1984: 41-42).

Also fueled by the mining rush, ranches and farms sprung up throughout the western valleys of Colorado during the late 1860s to early 1870s. The cattlemen practiced open range grazing and the industry boomed along with the towns they helped sustain. The first herds were Shorthorn cattle, but within a short period, more hardy Hereford cattle replaced them. The extremely harsh winter of 1885-1886 nearly devastated the cattle industry, though it quickly bounced back. The inevitable end of open range grazing began in 1891, when National Forest reserves were created, in part, to regulate grazing on public lands and to address watershed concerns. In 1905, the San Juan and Montezuma Forest Reserves were created, which eventually became the San Juan National Forest. While the cattle industry experienced grave difficulties with farmers and their fences, as well as competition with Hispanic and Basque sheepherders, open range grazing did not end until 1934, when the Taylor Grazing Act protected unappropriated public lands. While many cattlemen turned to sheep herding during the cattle price depression prior to World War I, soon after World War II, the cattle and sheep markets both fell drastically and the industry never fully recovered (Husband 1984: 71-72). While cattle and other livestock are still raised on many farms and ranches in rural southwestern Colorado, very few operations are completely dependent on livestock for income. Following World War II, the regional economy has become increasingly dependent on summer and winter tourism.

4.2 Research Objective

The survey was structured specifically to meet one objective. The study sought to determine if any cultural properties considered eligible or potentially eligible for nomination to the National Register of Historic Places (NRHP) were located within the project area. On a broader scale, the inventory results enhance our general archaeological knowledge of sites within the region. Collectively, small-scale survey data may assist in understanding population distributions throughout the prehistoric and historic periods and enable the formulation of hypotheses towards a variety of research domains that can be accepted, modified, or rejected by researchers. A low to moderate historic site density was expected in the surveyed area based on record search results and location within river valleys.

4.3 Previous Investigations

On December 3, 2016, Paula Fluder of SEAS conducted a records search on COMPASS, Colorado's online cultural resource database to determine if any previously recorded sites occur within the project area. Fourteen previously recorded sites, and segments thereof, are located within a one-half mile radius of the proposed project (Table 4.1). All of these sites are historic European American occupations dating from the 1870s to 1950s. The Rio Grande Southern Railroad Grade crosses the project area in two locations, and led to the documentation of two newly recorded segments (5SM 2030.35 and 5SM 2030.36), which are described in Section 5.

Table 4.1 Previously Recorded Sites within One-Half Mile of the Project Area (Continued)

Site Number	Site Type	Cultural/Temporal Affiliation	CHS Project / Report Identification Numbers
5SM 951	Coal Chutes; Coal Tipple; Railroad Grade; Depot (Vance Junction)	Historic European American, post 1890	MC.SHF.R158; SM.FS.R32; SM.FS.R39
5SM 951.8	Rail Related (Vance Junction Coal Chute)	Historic European American, post 1890	MC.SHF.R79; SM.FS.R39
5SM 1936	Foundation (Powerhouse Site)	Historic European American, ca. 1920 to 1929	SM.E.R1
5SM 1937	Trash Dump	Not specified	SM.E.R1
5SM 1938	Ore Chute/Bin; Foundation; Trash Dump	Historic European American	SM.E.R1
5SM 1956.1	Flume (Ilium Flume)	Historic European American, post 1900	SM.FS.R6
5SM 2030.25	Railroad and Bridge (Rio Grande Southern Railroad Wye at Ilium)	Historic European American, post 1900	SM.SHF.R9
5SM 2030.26	Railroad Segment (Rio Grande Southern)	Historic European American, post 1900	SM.LG.R19
5SM 2030.4	Railroad Bed (Rio Grande Southern Railroad Grade, South Fork Segment)	Historic European American, post 1900	SM.FS.R20
5SM 2030.6	Prospect Pits (Rio Grande Southern Railroad Pits)	Historic European American, ca. 1890 to 1920	SM.FS.R20
5SM 2382	Habitation; Aspen Art	Historic European American, ca. 1890 to 1930	SM.LG.R3
5SM 4617	Power Plant (Ilium Power Plant)	Historic European American, post 1900	SM.SHF.R9
5SM 4759	Mine Complex	Historic European American, ca. 1879 to 1930	SM.CH.R2
5SM 4760	Mine	Historic European American, ca. 1880 to 1900	SM.CH.R2
5SM 4881	Terraces	Historic European American, ca. 1870 to 1930	SM.CH.R2
5SM 5257	Dam (Upper Keystone Dam)	Historic European American	SM.LG.R19
5SM 6983	Mining Camp	Historic European American, ca. 1905 to 1920	MC.LM.R450; MC.FS.R491
5SM 7020	Bridge (County Road 63L Bridge)	Historic (Other), post 1950	SM.PA.R8

Figure 4.1 View Southwest towards Historic Ilium Power Plant Site (5SM 4617); Proposed Underground Distribution Line Will Be Placed in Existing, Disturbed Modern Power Line Corridor at Far Left

It should be noted that the proposed project passes approximately 100 feet east of an NRHP-eligible (official determination) historic property called the Ilium Power Plant Site (5SM 4617) (Figure 4.1), which since the 1960s has been converted into 'Camp Ilium,' a recreational camp with numerous structures and improvements added to the complex since its original construction (Neely et al. 2004). The Ilium Power Plant was built in 1900 by the San Miguel Consolidated Gold Mining Company to provide additional hydroelectric power to mining operations in the Telluride region once the Ames Power Plant had reached full capacity. The Ames Power Plant is located south of Ilium approximately 6 miles. The Ames Power Plant is famous as it is the first power plant to deliver AC current to industrial facilities. The proposed underground power line will not affect 5SM 4617 and it is over 100 feet east of the site boundary on the opposite side of FR 625, within the existing and cleared disturbance corridor that contains two modern-day power lines (both are under 50 years old). Since the proposed distribution line is underground, it is unlikely to have a visual impairment on 5SM 4617. In addition, an assortment of spruce and fir trees between FR 625 and the power line corridor blocks the view of the current project from Ilium.

The proposed project is also adjacent to site segment 5SM 2030.26 and 5SM 5257, both recorded by Alpine Archaeological Consultants (Horn 2005). 5SM 2030.26 is the crossing of the Rio Grande Southern Railroad grade (1890-1952) over the San Miguel River, about 3 miles west of Telluride. The proposed project heads east on the old railroad grade but diverges northeast about 150 feet before it gets to the San Miguel River crossing at 5SM 2030.26. Segment 5SM 2030.26 was field-recommended ineligible to the NRHP, although no official determination is listed on Compass. However, segment 5SM 2030.26 will not be affected by the proposed project as it is over 100 feet from the current project. 5SM

5257, remnants of the Upper Keystone Dam, is on the south side of and abuts site segment 5SM 2030.26. 5SM 5257 was field-recommended NRHP-eligible (no official determination listed on Compass), however, it will not be affected as it is over 150 feet from the current project and, like 5SM 2030.26, the view between the two areas is blocked by dense forest and riparian vegetation. FR 625 (the 'Ilium Road') was not recorded for this project as the proposed underground power line parallels but does not occur within or cross the road and was not within the surveyed area.

4.4 Methodology and Definitions

The APE and the total area surveyed is approximately 7.69 acres (3.11 ha). The 20-foot wide easement was surveyed by a singular pedestrian transect. For this inventory, a site was defined as any manifestation of past human activity consisting of a feature and /or 10 or more artifacts. An isolated find is defined as one to nine artifacts in a definable space not associated with a feature or structure, typically representing an isolated event or expedient activity. However, site and IF definitions are guidelines only and all cultural manifestations are individually evaluated for data potential. All field notes, maps, photographs, and inventory documents are on file at the SEAS office in Ignacio, Colorado. Sites are mapped, photographed, and site forms completed. Artifact inventory forms are completed with exact counts for artifact classes up to 100 items. For sites with more than 100 artifacts in any artifact class, field analysis may include 100 or more items per artifact class, until the nature of the assemblage has been adequately characterized. A primary flake is defined as having 100 percent cortex on the dorsal surface; a secondary flake is defined as having 1 to 99 percent cortex on the dorsal surface; a tertiary flake is defined as having no cortex on the dorsal surface. Bifacial thinning flakes are recognized by faceted, retouched, or lipped platforms, diffuse bulbs, thin cross sections, multiple flake scars paralleling the dorsal surface margin, and eraillures. Pressure flakes are small (less than 1 cm), thin, and usually non-cortical with a high frequency of collapsed platforms. Many indeterminate flake fragments are often found in which the flake type is not readily apparent. These flakes were assigned as indeterminate flake fragments. Usually, the vast majority of indeterminate flake fragments are non-cortical and probably derived from late stage decortication or flaked tool production. Hammerstones are generally large chunks or cobbles and recognized by battering wear on edges, which is often seen on cores as well (core/hammerstone). Utilized flakes are unshaped and exhibit retouched edges, evidently used for expedient purposes. Retouched edges or use wear patterns would have to be visually obvious in the field without magnification to be assigned to the utilized flake category. Flaked lithic tools include both informal tools, such as cores, utilized flakes, or hammerstones, and formal tools in which purposeful shaping is evident, such as scrapers, bifaces, projectile points, drills, knives, or choppers. Cobbles or raw materials displaying less than three flake scars are referred to as assayed cobbles. The term non-flaked lithic refers to ground stone implements and other artifacts, such as polishing stones, shaft abraders, ornaments, or non-flaked mauls and hoes.

Features, diagnostic points, or any other unique attributes, are measured, photographed, plotted, and described. Site plan maps are generally drawn at a one inch equals 20 m scale and include the site's relationship to existing and proposed infrastructure and topography. A site datum consisting of a rebar with stamped aluminum cap bearing the temporary SEAS site number was placed near the site center. The site was mapped using sub-meter accurate GIS data. For this project, Trimble Geo XT Pocket PC loaded with TerraSync software was utilized to record location data. Site dimensions, site area, and distance to intermittent and named drainages were calculated from the GPS data. Project maps and the

site plan map were produced from the GPS data using base maps from Terrain Navigator Pro. GIS project and plan maps were produced by Paula Fluder. On November 2, 2016, SEAS archaeologist and Principal Investigator Doug Loebig completed the cultural resource inventory.

4.5 Protection and Evaluation of Cultural Resources

Cultural resources are protected and managed under a variety laws and regulations by federal agencies. The primary laws under which cultural resource compliance studies are reviewed include Section 106 of the National Historic Preservation Act (NHPA) of 1966 (PL 89-665; 80 Stat. 915; 16 USC 470 et seq.) as amended (implemented under regulations of the Advisory Council on Historic Preservation, 36 CFR Part 800); the Archaeological Resources Protection Act (ARPA) of 1979 (PL 96-95; 93 Stat. 721; 16 USC 470aa et seq.) as amended (PL 100-555; PL 100-588); the American Indian Religious Freedom Act (AIRFA) of 1978 (PL 95-431; 92 Stat. 469; 42 USC 1996); and the Native American Graves Protection and Repatriation Act (NAGPRA) of 1990 (PL 101-601; 104 Stat. 3048; 25 USC 3001; 43 CFR Part 10). Cultural resources protected under ARPA, AIRFA, and NAGPRA are typically considered and evaluated under the review process set forth in Section 106 of the NHPA. In addition, the conservation of historic and cultural resources is established through federal policy as a component of the NEPA (Section 101[b][4]) process for federally authorized permits, funding, and projects (40 CFR Part 1 1502.16[g]). Cultural properties considered significant and eligible for listing on the National Register must possess integrity of location, design, setting, materials, workmanship, feeling, and association and must meet one or more of the following criteria;

Criterion A: Association with events that have made a significant contribution to the broad patterns of our history

Criterion B: Association with lives of persons significant in our past

Criterion C: Embodiment of distinctive characteristics of a type, period, or method of construction, or representation of the work of a master, or possession of high artistic values, or representation of a significant distinguishable entity whose components may lack individual distinction

Criterion D: Has yielded, or may be likely to yield, information important in prehistory or history

Most archaeological sites are evaluated in terms of Criterion D, although numerous exceptions occur, particularly if standing architecture or linear features or sites are involved.

5.0 Results

The cultural resource inventory encountered and documented two newly recorded segments (5SM 2030.35 and 5SM 2030.36) of a previously recorded linear site (5SM 2030); the Rio Grande Southern Railroad. Site segment information is summarized below in Table 5.1.

Table 5.1 Site Segment Summary Table

CO Site No.	SEAS Temporary Site No.	Cultural Affiliation/ Site Type	NRHP Eligibility Recommendation
5SM 2030.35	SEAS 16-101-01	European American/ Railroad Grade ('Rio Grande Southern Railroad'; 1890-1952)	As a whole, 5SM 2030 is NRHP-eligible under Criteria A and B; Segment 5SM 2030.35 is non-contributing
5SM 2030.36	SEAS 16-101-02	European American/ Railroad Grade ('Rio Grande Southern Railroad'; 1890-1952)	As a whole, 5SM 2030 is NRHP-eligible under Criteria A and B; Segment 5SM 2030.36 is non-contributing

5.1 Newly Recorded Linear Site Segments

5.1.1 Site Segment 5SM 2030.35

Site Number: 5SM 2030.35 (SEAS 16-101-01)
USGS Map: Gray Head, CO 1953; USGS Map Code 37107-H8-TF-024
Land Status: Private land
Legal Location: N/2, SE/4, NE/4; SW/4, NE/4; NW/4, NW/4, SE/4; and N/2, SW/4 of Section 32 (projected), Township 42 North, Range 9 West, NMPM
UTM Coordinates: East End = NAD 83 Zone 13: N 4203970 m, E 247225 m
West End = NAD 83 Zone 13: N 4203478 m, E 245796 m
Site Type: Railroad Grade Segment (Rio Grande Southern Railroad; 'Galloping Goose Trail')
Cultural Affiliation: European American, 1890-1952
Site Dimensions and Area: 4,626 ft x 20 ft; 92,520 ft² = 2.12 acres

Site Description:

From 8,480 to 8,640 feet ft amsl, site segment 5SM 2030.35 traverses lower mountain slopes on the south side of the San Miguel River Valley. The San Miguel River ranges from 30 to 300 m north of the segment. The aspect is northeast and surrounding slopes range from 2 to 60 degrees. Soil depth is 0 to 100 cm based on drainage and railroad grade cuts. Soils are typically dark brown to dark grayish brown silt loam to gravelly loam colluvium with talus in some areas. Vegetation covers 80 to 100 percent of the ground surface. A mixed coniferous-deciduous upper montane forest characterizes the site segment

vicinity. The overstory is dominated by Englemann spruce and aspen and the understory is primarily composed of nodding brome, mountain lover, kinnikinnick, meadow timothy, smooth brome, pussytoes, willow thickets in wetlands, cinquefoil, mountain snowberry, creeping Oregon grape, heath aster, and various unidentified grasses.

Driven by the gold and silver mining boom in southwestern Colorado during the late 1800s, railroads quickly replaced pack mule trains and toll roads over the high mountain passes and narrow river valleys. The Rio Grande Southern Railroad was built by Otto Mears, a Russian immigrant who served in the Union Army before coming out West. Mears had built a number of toll roads over the San Juan Mountains and had become a successful entrepreneur in the region. His first railroad, the Silverton Railroad (later dubbed the 'Rainbow Route') went from Silverton up Mineral Creek to Albany for access to the lucrative Red Mountain mines. The Silverton Railroad was completed in 1889. In 1890, he turned his attention and investment into building the Rio Grande Southern Railroad. Work on this narrow gauge line began in 1890 and would connect Durango with Ridgeway. The railroad reached Telluride and the Pandora Mine by 1891. Demonetization of silver and the resulting crash of silver prices in 1893 hit the mines and early railroads particularly hard and Otto Mears' Rio Grande Southern Railroad business began to fail. The Denver & Rio Grande Railroad bought the majority interest in the Southern Rio Grande Railroad soon after and retained it as a subsidy. Coal and lumber shipments, as well as tourism kept the railroad in business through the changing economic times of the early 20th Century (Frazer and Strand 1997). In 1931, the Rio Grande Southern Railroad began to utilize more light-weight hybrid trains to cut costs for hauling lighter freight, such as mail and tourists. These hybrid trains were nicknamed the 'Galloping Goose' and were operated until 1952, when the railroad went out of business as it could no longer compete with automobiles and highway truck shipping.

This segment of the Rio Grande Southern Railroad grade is 4,626 feet in length with a máximum width of about 20 feet, or 2.12 acres (Figures 5.1 to 5.4). The grade has a gravel surface with a thin veneer of coal cinders. All of the rails and most of the ties have been salvaged. Several railroad tie fragments have been churned into the matrix of the grade at the east end, probably when the entire segment and beyond was regraded for development as a recreational trail A modern steel and plank foot bridge has been built over the crossing of Skunk Creek and no remnants of the original bridge are apparent. Artifacts were not found in association with this segment and may be due to collecting by trail hikers or concealed under dense vegetation. The condition of this segment is poor and railroad ties and rails have been removed. A steel-tower transmission line (115kV) built in 1993 has been constructed on and adjacent to the grade and, more recently, the grade has been converted to a pedestrian and bike trail known locally as the 'Galloping Goose Trail.' It appears that a modern underground telephone line has been built into portions of the grade as well. Water erosion and upslope sedimentation has heavily affected the nature of the railroad grade. In conjunction with the Ridgeway Railroad Museum and the Colorado Division of Parks and Wildlife, San Miguel County has placed two modern interpretative signs along this segment that briefly explain the history of the railroad.

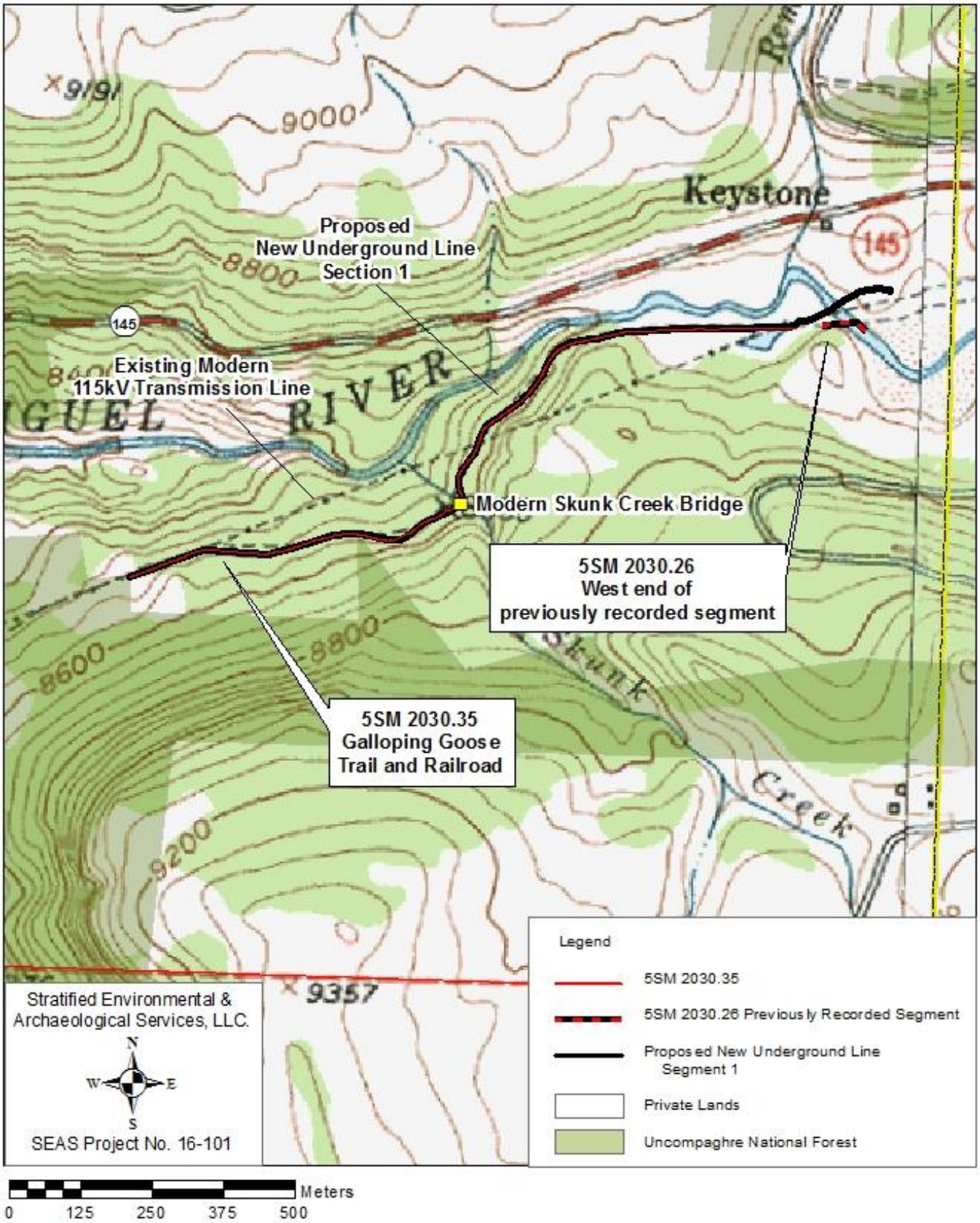

Figure 5.1 Site Segment Plan Map, 5SM 2030.35

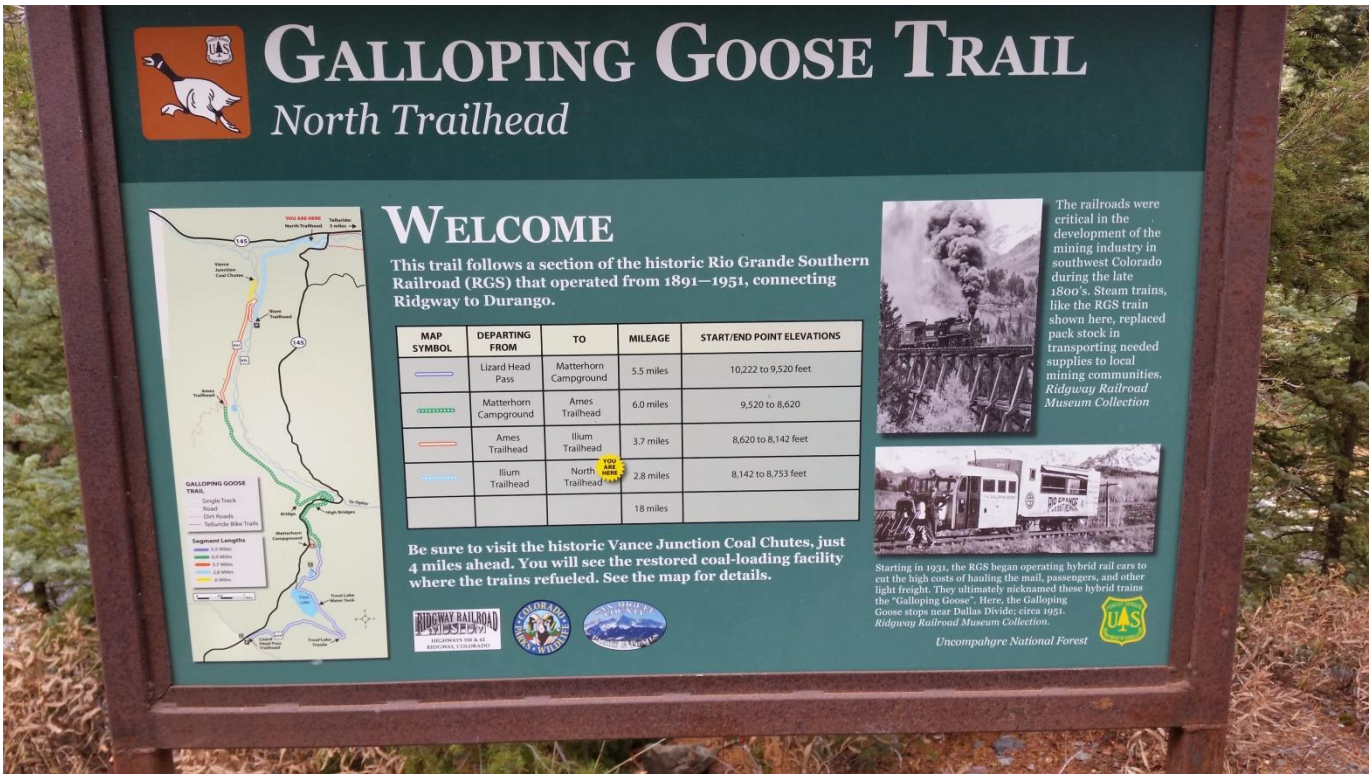

Figure 5.2 View West from East End(Top) and Interpretive Sign on Trail (Bottom), Site Segment 5SM 2030.35

Figure 5.3 View Southwest in Midsection (Top) and View Southwest at Confluence with Keystone Gorge Trail (Bottom), Site Segment 5SM 2030.35

Figure 5.4 View North of Modern Trail Bridge Over Skunk Creek, Site Segment 5SM 2030.35

Significance: Site 5SM 2030, as a whole, is considered NRHP-eligible under Criteria A & B, as previously and officially determined in 1993. Site segment 5SM 2030.35 is recommended as non-contributing as it lacks sufficient integrity. A modern transmission line and a modern underground telephone line have been built into or next to the grade. All railroad rails and ties have been removed and the grade has been modified and transformed into a modern hiking trail known as the 'Galloping Goose Trail.' Water erosion and upslope sedimentation have heavily impacted the nature of the railroad grade throughout this section. No historic features are associated with this segment and the original bridge at Skunk Creek has been completely removed and replaced with a modern steel and plank footbridge. It appears the railroad grade segment was recently regraded, probably for the development of the Galloping Goose Trail.

Recommendation: No further cultural resource work is recommended at site segment 5SM 2030.35. However, the current condition of the grade and hiking trail will not be further degraded by this project, which is an underground power line. Following trenching and placement of the power line and fiber optic cable within the trench, the 2-foot wide, 5.5-foot deep trench will be immediately backfilled, compacted, and recontoured to the existing grade.

5.1.2 Site Segment 5SM 2030.36

Site Number:	5SM 2030.36 (SEAS 16-101-02)
USGS Map:	Gray Head, CO 1953; USGS Map Code 37107-H8-TF-024
Land Status:	Private land
Legal Location:	SW/4, SE/4, SW/4 of Section 6 and the E/2, NW/4, NE/4 of Section 7, Township 42 North, Range 9 West, NMPM
UTM Coordinates:	Northeast End = NAD 83 Zone 13: N 4201351 m, E 245216 m Southwest End = NAD 83 Zone 13: N 4201094 m, E 245032 m
Site Type:	Railroad Grade Segment (Rio Grande Southern Railroad; 'Galloping Goose Trail')
Cultural Affiliation:	European American, 1890-1952
Site Dimensions and Area:	1,263 ft x 20 ft; ft^2 = 0.58 acres

Site Description:

From 8,140 ft to 8,180 feet amsl, site segment 5SM 2030.36 is located on lower mountain slopes and the valley bottom of the scenic South Fork San Miguel River Valley. This segment crosses the South Fork San Miguel River on its south end. The aspect is mostly west to southwest and the slope varies from 0 to 15 degrees. Soil depth is over 100 cm based on road and railroad grade cuts. Soils are a dark grayish brown silt loam to gravelly loam colluvium and alluvium. Vegetation obscures 80 to 100 percent of the ground cover. An upper montane mixed coniferous-deciduous forest characterizes the area and the overstory is dominated by Englemann spruce and aspen. The understory is primarily composed of nodding brome, fescue, shrubby cinquefoil, yarrow, wild rose, mountain lover, kinnikinnick, meadow timothy, pussytoes, and snowberry.

Driven by the gold and silver mining boom in southwestern Colorado during the late 1800s, railroads quickly replaced pack mule trains and toll roads over the high mountain passess and narrow river valleys. The Rio Grande Southern Railroad was built by Otto Mears, a Russian immigrant who served in the Union Army before coming out West. Mears had built a number of toll roads over the San Juan Mountains and had become a successful entrepreneur in the region. His first railroad, the Silverton Railroad (known locally as the 'Rainbow Route') went from Silverton up Mineral Creek to Albany for access to the lucrative Red Mountain mines. The Silverton Railroad was completed in 1889. In 1890, he quickly turned his attention and investment into building the Rio Grande Southern Railroad. Work on this narrow gauge line began in 1890 and would connect Durango with Ridgeway. The railroad reached Telluride and the Pandora Mine by 1891. Demonetization of silver and the resulting crash of silver prices in 1893 hit the mines and early railroads particularly hard and Otto Mears' Rio Grande Southern Railroad business began to fail. The Denver & Rio Grande Railroad bought the majority interest in the Southern Rio Grande Railroad soon after and retained it as a subsidy. Coal and lumber shipments, as well as tourism kept the railroad in business through the changing economic times of the early 20th Century (Frazer and Strand 1997). In 1931, the Rio Grande Southern Railroad began to utilize more light-weight hybrid trains to cut costs for hauling lighter freight, such as mail and tourists. These hybrid trains were nicknamed the 'Galloping Goose' and were operated until 1952, when the railroad went out of business as it could no longer compete with automobiles and highway truck shipping.

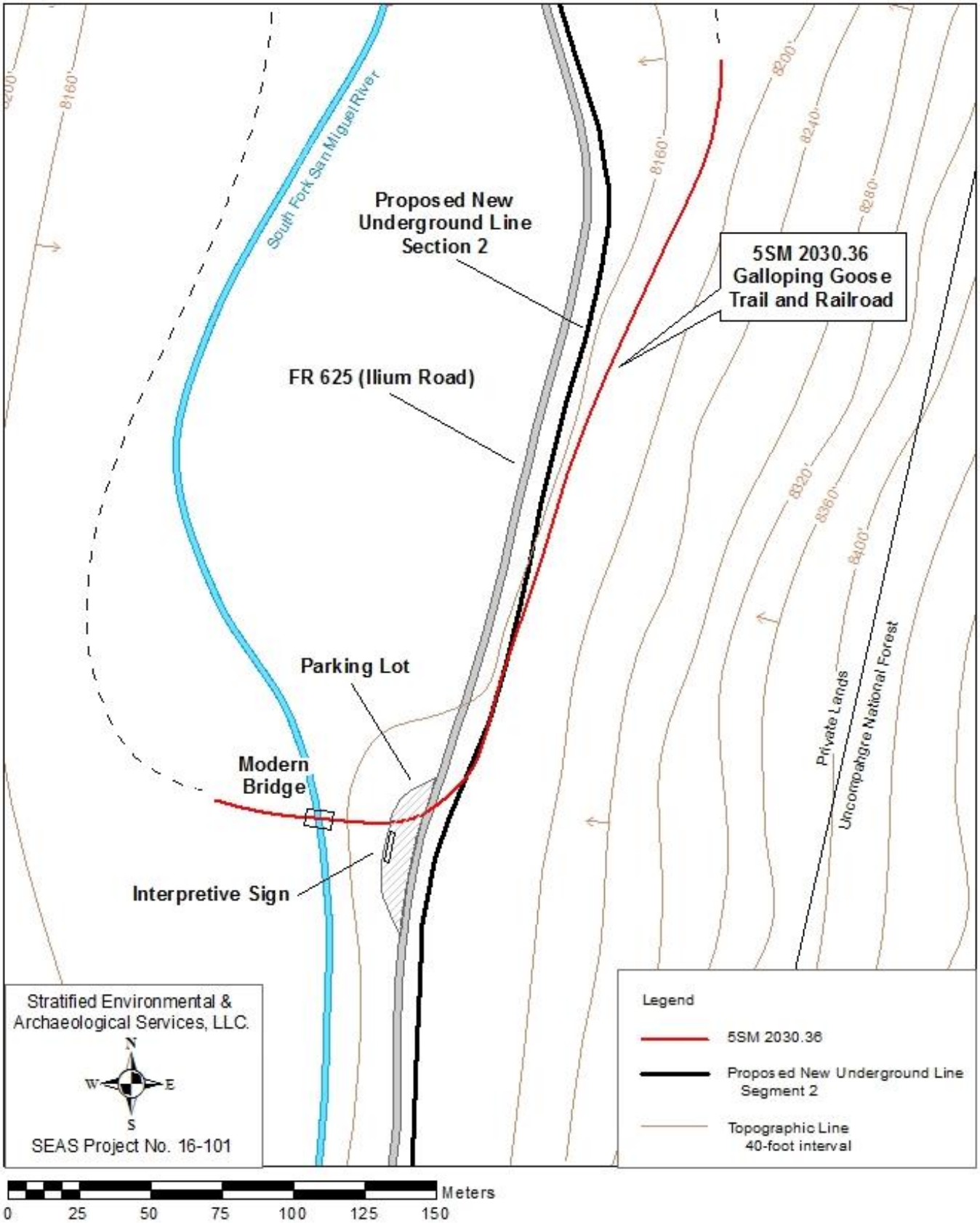

Figure 5.5 Site Segment Plan Map, 5SM 2030.36

Figure 5.6 View Northeast from Northeast End (Top) and View Southwest with FR 625 at Right (Bottom), Site Segment 5SM 2030.36

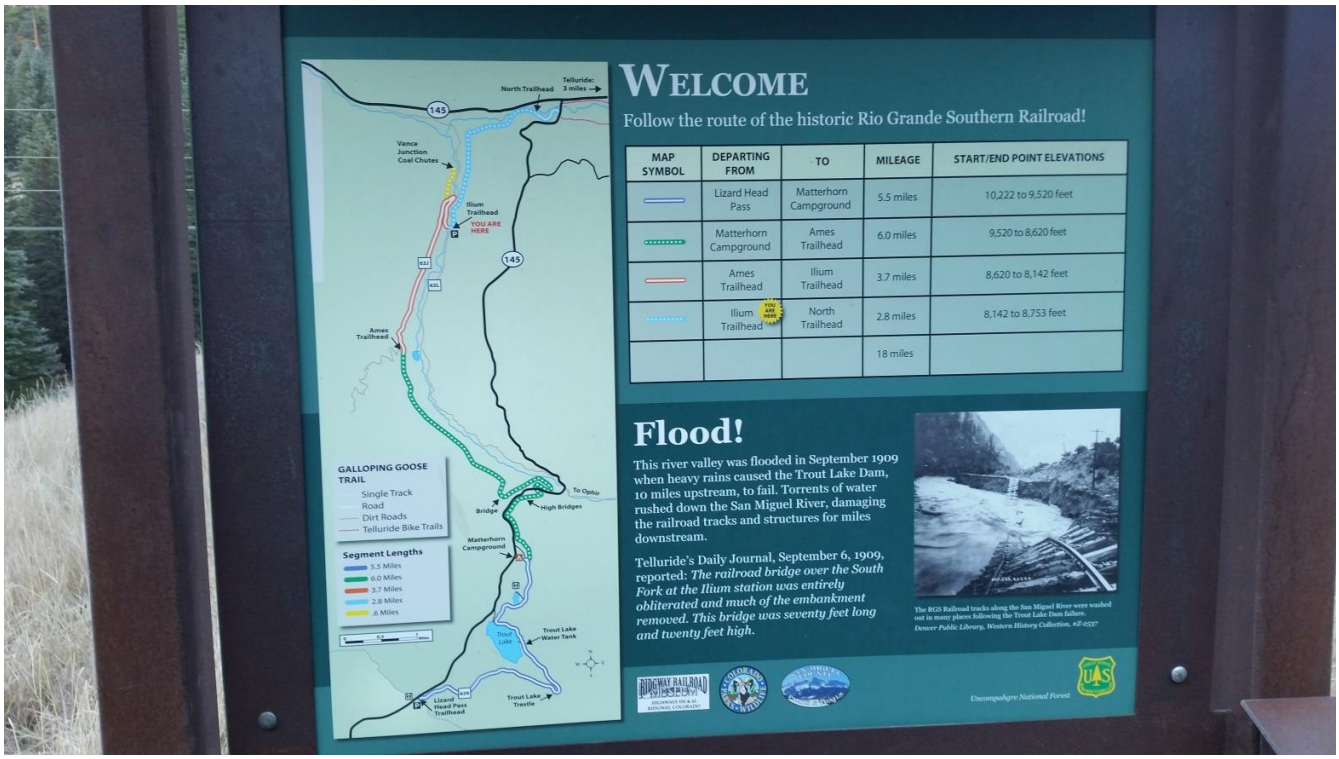

Figure 5.7 View Southwest of Site Segment 5SM 2030.36 Crossing of FR 625 towards Galloping Goose Trailhead Parking Area (Top) and Interpretive Sign at Trailhead (Bottom), 5SM 2030.36

Figure 5.8 View of Modern Footbridge on South Fork San Miguel River Facing Northwest, 5SM 2030.36

This segment of the Rio Grande Southern Railroad grade is 1,263 feet in length with a máximum width of about 20 feet, or 0.58 acres (Figures 5.5 to 5.8). The grade has been regraded and the original gravel surface is not apparent and no coal cinders were observed. A modern steel and plank foot bridge has been built over the crossing of the South Fork San Miguel River and little sign of the original bridge is apparent, with the exception of a grade remnants either side of the river. Artifacts were not found in association with this segment and may be due to the recent regrading of the segment, surface collecting by trail hikers, or possibly dense vegetation. The condition of this segment is poor and railroad ties and rails have been completely removed. The grade has been converted to a pedestrian and bike trail known locally as the 'Galloping Goose Trail.' Water erosion and upslope sedimentation has also heavily affected the nature of the railroad grade. The grade was recently modified and regraded and has been heavily impacted at the crossing of FR 625, where a gravel parking lot trailhead has also been constructed. In conjunction with the Ridgeway Railroad Museum and the Colorado Division of Parks and Wildlife, San Miguel County has placed a modern interpretative sign at the trailhead parking lot on FR 625. This sign shows a photograph of the flooding and destruction of a portion of the railroad following heavy rains that broke the Trout Creek dam in September of 1909.

Significance: Site 5SM 2030, as a whole, is considered NRHP-eligible under Criteria A & B, as previously and officially determined in 1993. Site segment 5SM 2030.36 is recommended as non-contributing as it lacks sufficient integrity. All railroad rails and ties have been removed and the grade has been modified and transformed into a modern hiking trail known as the 'Galloping Goose Trail.' Water erosion and upslope sedimentation have heavily impacted the nature of the railroad grade throughout this section. It appears the railroad grade segment was

recently regraded, probably for the recreational development of the Galloping Goose Trail. No historic features are associated with this segment and the original bridge crossing over the South Fork San Miguel River has been removed and replaced with a modern steel and plank footbridge.

Recommendation: No further cultural resource work is recommended at site segment 5SM 2030.36. However, the current condition of the grade and hiking trail will not be further degraded by this project, which is an underground power line. Following trenching and placement of the power line and fiber optic cable within the trench, the 2-foot wide, 5.5-foot deep trench will be immediately backfilled, compacted, and recontoured to the existing grade.

6.0 Conclusions and Recommendations

The cultural resource inventory for SMPA's proposed Telluride Reliability Project encountered and documented two newly recorded segments (5SM 2030.35 and 5SM 2030.36) of the Rio Grande Southern Railroad (5SM 2030). Both of the segments date from 1890 to 1952, when the railroad was abandoned. As a whole, site 5SM 2030 is considered an NRHP-eligible linear cultural property under Criteria A & B, as previously and officially determined in 1993. Both site segments 5SM 2030.35 and 5SM 2030.36 are considered non-contributing to the NRHP eligibility as they lack sufficient integrity. In addition to previous disturbances from salvaging of all construction materials, heavy water erosion and sedimentation, and construction of roads, bridges, power lines, and a telephone line, the segments were recently and mechanically regraded, probably for development and transformation of the old railroad grade into a modern recreational hiking and biking trail. In terms of management recommendations, no further cultural resource work is recommended at site segments 5SM 2030.35 and 5SM 2030.36. However, the current condition of the railroad grade and hiking trail will not be further degraded by this project, which is an underground power line. Following trenching and placement of the power line and fiber optic cable within the trench, the 2-foot wide, 5.5-foot deep trench will be immediately backfilled, compacted, and recontoured to the existing grade. Therefore, cultural resource clearance for the project to proceed is recommended as no significant or potentially significant cultural properties will be affected.

7.0 References Cited

Aubrey, W.M.

1991 *Geologic Framework of Cretaceous and Tertiary Rocks in the Southern Ute Indian Reservation and Adjacent Areas in the Northern San Juan Basin, Southwestern Colorado*. United States Geological Survey Professional Paper 1505-B. U.S. Government Printing Office, Washington D.C.

Callaway, D.G., J.C. Janetski, and O.C. Stewart

1986 Ute. In: *Handbook of North American Indians: Volume XI; Great Basin*, edited by W.L. D'Azevado, pp. 336-337. Smithsonian Institution, Washington D.C.

Cordell, L.S.

1984 *Prehistory of the Southwest*. Academic Press, Inc., San Diego.

Croll, K. and S. Lamore

2009 *Class III Cultural Resource Inventory Dawson Draw 2 Habitat Improvement Project (BLM Report No. SJ08041) San Miguel and Dolores Counties, Colorado*. ERO Resources Corporation, Denver. ERO Project #4269. SHPO Report #MCLMR581.

Delaney, R.

1974 *The Southern Ute People*. Indian Tribal Series, Phoenix, Arizona.

Frazer, C.B and J.H. Strand
1997 *Railroads in Colorado, 1858 – 1948*. National Register of Historic Places, Multiple Property Documentation Form. U.S. Department of the Interior, National Park Service.

Gillispie, W.B.
1985 Holocene Climate and Environment of Chaco Canyon. In: *Environment and Subsistence in Chaco Canyon*, edited by F.J. Mathien, pp 13-45. Publications in Archaeology 18E, Chaco Canyon Studies. National Park Service, U.S. Department of the Interior, Albuquerque.

Hammack, N.S. and R. Walkenhorst
1991 Facility Site and Ancillary Construction Features. In: *Cultural Resource Monitoring and Testing, Sand Canyon CO2 Project, Montezuma County, Colorado*, by N.S. Hammack, pp. 25-55. Complete Archaeological Services Associates, Cortez.

Horn, J.
2005 *Cultural Resource Inventory of the Galloping Goose Trail at Society Turn, San Miguel County, Colorado*. OAHP Report No. SM.LG.R19. Alpine Archaeological Consultants. Montrose, CO.

Husband, M.B.
1984 *Colorado Plateau Country Historic Context*. Office of Archaeology and Historic Preservation, Colorado Historical Society, Denver.

Neely, R., J. Burr, and G. Archimede
2004 *Cultural Resource Inventory of Select Historic Sites in San Miguel County, Colorado (SHF 2002-02-09)*. OAHP Report No. SM.SHF.R9. Alpine Archaeological Consultants. Montrose, CO.

Park, W.Z., E.E. Siskin, A.M. Cooke, W.T. Mulloy, M.K. Opler, I.T. Kelley, and M.L. Zigmond
1938 Tribal Distribution in the Great Basin. *American Anthropologist* 40: 623-638.

Pierson, L.M.
1980 *A Cultural Resource Summary of the East Central Portion of the Moab District*. Cultural Resource Series No. 10. Bureau of Land Management, Salt Lake City.

Reed, A.D.
1994 The Numic Occupation of Western Colorado and Eastern Utah during the Prehistoric and Protohistoric Periods. In: *Across the West: Human Population Movement and the Expansion of the Numa*, edited by D.B. Madsen and D. Rhode, pp. 188-199. University of Utah Press, Salt Lake City.

1997 The Gateway Tradition: A Formative Stage Culture Unit for East-Central Utah and West-Central Colorado. *Southwwestern Lore* 63(2): 19-26).

Reed, A.D. and M.D. Metcalf
1999 *Colorado Prehistory: A Context for the Northern Colorado River Basin*. Colorado Council of Professional Archaeologists, Denver.

Schroeder, A.H.
1965 A Brief History of the Southern Utes. *Southwestern Lore* 30(1): 53-78.

Sellers, W.D. and R.H. Hill
1974 *Arizona Climate, 1931-1972*. University of Arizona Press, Tucson.

Twedo, O.
1979 *Geologic Map of Colorado*. U.S. Geological Survey. Washington, D.C.

WRCC
2016 Western Regional Climate Center. Information compiled from website at: http://www.wrcc.dri.edu/summary/climsmnm.html.

Authorization ID: ***NOR579***
Contact Name: ***SAN MIGUEL POWER***
Expiration Date: ***12/31/2017***
Use Code: ***641***

FS-2700-4 (V. 01/2014)
OMB 0596-0082

U.S. DEPARTMENT OF AGRICULTURE
FOREST SERVICE

SPECIAL USE PERMIT

Authority: FEDERAL LAND POLICY AND MGMT ACT, AS AMENDED October 21, 1976

SAN MIGUEL POWER ASSOCIATION of PO Box 1150, Ridgway, CO, 81432, United States, (hereinafter "the Holder") is authorized to use or occupy National Forest System lands in the GRAND MESA, UNCOMPAHGRE, AND GUNNISON NATIONAL FORESTS or the Norwood Ranger District unit of the National Forest System, subject to the terms and conditions of this special use permit (the permit).

This permit covers 11.52 acres or .02 miles ("the permit area") in the following location:

New Mexico P.M., T. 42 N., R. 9 W.,	***New Mexico P.M., T. 43 N., R. 9 W.,***
Sections 6, 7, 18 and 19	***Sections 31 and 32***
San Miguel County, CO	***San Miguel County, CO***

as shown on the map attached as **Exhibit A**. This permit issued for the purpose of:

Temporary Construction Permit to authorize the burial of approximately 12,550 linear feet of 24.9 kV electric distribution line. Temporary Right-of-way width is 40 feet wide.

Each group of vaults and cabinets will have a permanent easement of approximately 40'x40'.

TERMS AND CONDITIONS

I. GENERAL TERMS

A. AUTHORITY. This permit is issued pursuant to the Federal Land Policy and Management Act, as amended October 21, 1976 and 36 CFR Part 251, Subpart B, as amended, and is subject to their provisions.

B. AUTHORIZED OFFICER. The authorized officer is the Forest or Grassland Supervisor or a subordinate officer with delegated authority.

C. TERM. This permit shall expire at midnight on **December 31, 2017**, seventeen months from the date of issuance.

D. RENEWAL. This permit is not renewable. Prior to expiration of this permit, the Holder may apply for a new permit that would renew the use and occupancy authorized by this permit. Applications for a new permit must be submitted at least 6 months prior to expiration of this permit. Renewal of the use and occupancy authorized by this permit shall be at the sole discretion of the authorized officer. At a minimum, before renewing the use and occupancy authorized by this permit, the authorized officer shall require that (1) the use and occupancy to be authorized by the new permit is consistent with the standards and guidelines in the applicable land management plan; (2) the type of use and occupancy to be authorized by the new permit is the same as the type of use and occupancy authorized by this permit; and (3) the Holder is in compliance with all the terms of this permit. The authorized officer may prescribe new terms and conditions when a new permit is issued.

E. AMENDMENT. This permit may be amended in whole or in part by the Forest Service when, at the discretion of the authorized officer, such action is deemed necessary or desirable to incorporate new terms that may be required by law, regulation, directive, the applicable forest land and resource management plan, or projects and activities implementing a land management plan pursuant to 36 CFR Part 215.

F. COMPLIANCE WITH LAWS, REGULATIONS, AND OTHER LEGAL REQUIREMENTS. In exercising the rights and privileges granted by this permit, the Holder shall comply with all present and future federal laws and regulations and all present and future state, county, and municipal laws, regulations, and other legal requirements that apply to the permit area, to the extent they do not conflict with federal law, regulation, or policy. The Forest Service assumes no responsibility for enforcing laws, regulations, and other legal requirements that fall under the jurisdiction of other governmental entities.

G. NON-EXCLUSIVE USE. The use or occupancy authorized by this permit is not exclusive. The Forest Service reserves the right of access to the permit area, including a continuing right of physical entry to the permit area for inspection, monitoring, or any other purpose consistent with any right or obligation of the United States under any law or regulation. The Forest Service reserves the right to allow others to use the permit area in any way that is not inconsistent with the Holder's rights and privileges under this permit, after consultation with all parties involved. Except for any restrictions that the Holder and the authorized officer agree are necessary to protect the installation and operation of authorized temporary improvements, the lands and waters covered by this permit shall remain open to the public for all lawful purposes.

H. ASSIGNABILITY. This permit is not assignable or transferable.

I. TRANSFER OF TITLE TO THE IMPROVEMENTS.

1. Notification of Transfer. The Holder shall notify the authorized officer when a transfer of title to all or part of the authorized improvements is contemplated.

2. Transfer of Title. Any transfer of title to the improvements covered by this permit shall result in termination of the permit. The party who acquires title to the improvements must submit an application for a permit. The Forest Service is not obligated to issue a new permit to the party who acquires title to the improvements. The authorized officer shall determine that the applicant meets requirements under applicable federal regulations.

J. CHANGE IN CONTROL OF THE BUSINESS ENTITY.

1. Notification of Change in Control. The Holder shall notify the authorized officer when a change in control of the business entity that holds this permit is contemplated.

a. In the case of a corporation, control is an interest, beneficial or otherwise, of sufficient outstanding voting securities or capital of the business so as to permit the exercise of managerial authority over the actions and operations of the corporation or election of a majority of the board of directors of the corporation.

b. In the case of a partnership, limited partnership, joint venture, or individual entrepreneurship, control is a beneficial ownership of or interest in the entity or its capital so as to permit the exercise of managerial authority over the actions and operations of the entity.

c. In other circumstances, control is any arrangement under which a third party has the ability to exercise management authority over the actions or operations of the business.

2. Effect of Change in Control. Any change in control of the business entity as defined in paragraph 1 of this clause shall result in termination of this permit. The party acquiring control must submit an application for a special use permit. The Forest Service is not obligated to issue a new permit to the party who acquires control. The authorized officer shall determine whether the applicant meets the requirements established by applicable federal regulations.

II.IMPROVEMENTS

A. LIMITATIONS ON USE. Nothing in this permit gives or implies permission to build or maintain any structure or facility or to conduct any activity, unless specifically authorized by this permit. Any use not specifically authorized by this permit must be proposed in accordance with 36 CFR 251.54. Approval of such a proposal through issuance of a new permit or permit amendment is at the sole discretion of the authorized officer.

B. PLANS. All plans for development, layout, construction, reconstruction, or alteration of improvements in the permit area, as well as revisions to those plans must be prepared by a professional engineer, architect, landscape architect, or other qualified professional based on federal employment standards acceptable to the authorized officer. These plans and plan revisions must have written approval from the authorized officer before they are implemented. The authorized officer may require the Holder to furnish as-built plans, maps, or surveys upon completion of the work.

C. CONSTRUCTION. Any construction authorized by this permit shall commence by September 2016 and shall be completed by December 2017.

III. OPERATIONS.

A. PERIOD OF USE. Use or occupancy of the permit area shall be exercised at least 190 days each year.

B. CONDITION OF OPERATIONS. The Holder shall maintain the authorized improvements and permit area to standards of repair, orderliness, neatness, sanitation, and safety acceptable to the authorized officer and consistent with other provisions of this permit. Standards are subject to periodic change by the authorized officer when deemed necessary to meet statutory, regulatory, or policy requirements or to protect national forest resources. The Holder shall comply with inspection requirements deemed appropriate by the authorized officer.

C. INSPECTION BY THE FOREST SERVICE. The Forest Service shall monitor the Holder's operations and reserves the right to inspect the permit area and transmission facilities at any time for compliance with the terms of this permit. The Holder's obligations under this permit are not contingent upon any duty of the Forest Service to inspect the permit area or transmission facilities. A failure by the Forest Service or other governmental officials to inspect is not a justification for noncompliance with any of the terms and conditions of this permit.

IV. RIGHTS AND LIABILITIES

A. LEGAL EFFECT OF THE PERMIT. This permit, which is revocable and terminable, is not a contract or a lease, but rather a federal license. The benefits and requirements conferred by this authorization are reviewable solely under the procedures set forth in 36 CFR 251, Subpart C and 5 U.S.C. 704. This permit does not constitute a contract for purposes of the Contract Disputes Act, 41 U.S.C. 601. The permit is not real property, does not convey any interest in real property, and may not be used as collateral for a loan.

B. VALID OUTSTANDING RIGHTS. This permit is subject to all valid outstanding rights. Valid outstanding rights include those derived under mining and mineral leasing laws of the United States. The United States is not liable to the Holder for the exercise of any such right.

C. ABSENCE OF THIRD-PARTY BENEFICIARY RIGHTS. The parties to this permit do not intend to confer any rights on any third party as a beneficiary under this permit.

D. SERVICES NOT PROVIDED. This permit does not provide for the furnishing of road or trail maintenance, water, fire protection, search and rescue, or any other such service by a government agency, utility, association, or

E. RISK OF LOSS. The Holder assumes all risk of loss associated with use or occupancy of the permit area, including but not limited to theft, vandalism, fire and any fire-fighting activities (including prescribed burns), avalanches, rising waters, winds, falling limbs or trees, and other forces of nature. If authorized temporary improvements in the permit area are destroyed or substantially damaged, the authorized officer shall conduct an analysis to determine whether the improvements can be safely occupied in the future and whether rebuilding should be allowed. If rebuilding is not allowed, the permit shall terminate.

F. DAMAGE TO UNITED STATES PROPERTY. The Holder has an affirmative duty to protect from damage the land, property, and other interests of the United States. Damage includes but is not limited to fire suppression costs, damage to government-owned improvements covered by this permit, and all costs and damages associated with or resulting from the release or threatened release of a hazardous material occurring during or as a result of activities of the Holder or the Holder's heirs, assigns, agents, employees, contractors, or lessees on, or related to, the lands, property, and other interests covered by this permit. For purposes of clause IV.F and

section V, "hazardous material" shall mean (a) any hazardous substance under section 101(14) of the Comprehensive Environmental Response, Compensation, and Liability Act (CERCLA), 42 U.S.C. § 9601(14); (b) any pollutant or contaminant under section 101(33) of CERCLA, 42 U.S.C. § 9601(33); (c) any petroleum product or its derivative, including fuel oil, and waste oils; and (d) any hazardous substance, extremely hazardous substance, toxic substance, hazardous waste, ignitable, reactive or corrosive materials, pollutant, contaminant, element, compound, mixture, solution or substance that may pose a present or potential hazard to human health or the environment under any applicable environmental laws.

1. The Holder shall avoid damaging or contaminating the environment, including but not limited to the soil, vegetation (such as trees, shrubs, and grass), surface water, and groundwater, during the Holder's use or occupancy of the permit area. If the environment or any government property covered by this permit becomes damaged during the Holder's use or occupancy of the permit area, the Holder shall immediately repair the damage or replace the damaged items to the satisfaction of the authorized officer and at no expense to the United States.

2. The Holder shall be liable for all injury, loss, or damage, including fire suppression, prevention and control of the spread of invasive species, or other costs in connection with rehabilitation or restoration of natural resources associated with the use or occupancy authorized by this permit. Compensation shall include but not be limited to the value of resources damaged or destroyed, the costs of restoration, cleanup, or other mitigation, fire suppression or other types of abatement costs, and all administrative, legal (including attorney's fees), and other costs. Such costs may be deducted from a performance bond required under clause IV.I.

3. The Holder shall be liable for damage caused by use of the Holder or the Holder's heirs, assigns, agents, employees, contractors, or lessees to all roads and trails of the United States to the same extent as provided under clause IV.F.1, except that liability shall not include reasonable and ordinary wear and tear.

G. <u>HEALTH, SAFETY, AND ENVIRONMENTAL PROTECTION</u>. The Holder shall promptly abate as completely as possible and in compliance with all applicable laws and regulations any activity or condition arising out of or relating to the authorized use or occupancy that causes or threatens to cause a hazard to public health or the safety of the Holder's employees or agents or harm to the environment (including areas of vegetation or timber, fish or other wildlife populations, their habitats, or any other natural resources). The Holder shall prevent impacts to the environment and cultural resources by implementing actions identified in the operating plan to prevent establishment and spread of invasive species. The Holder shall immediately notify the authorized officer of all serious accidents that occur in connection with such activities. The responsibility to protect the health and safety of all persons affected by the use or occupancy authorized by this permit is solely that of the Holder. The Forest Service has no duty under the terms of this permit to inspect the permit area or operations and activities of the Holder for hazardous conditions or compliance with health and safety standards.

H. <u>INDEMNIFICATION OF THE UNITED STATES</u>. The Holder shall indemnify, defend, and hold harmless the United States for any costs, damages, claims, liabilities, and judgments arising from past, present, and future acts or omissions of the Holder in connection with the use or occupancy authorized by this permit. This indemnification provision includes but is not limited to acts and omissions of the Holder or the Holder's heirs, assigns, agents, employees, contractors, or lessees in connection with the use or occupancy authorized by this permit which

result in (1) violations of any laws and regulations which are now or which may in the future become applicable, and including but not limited to those environmental laws listed in clause V.A of this permit; (2) judgments, claims, demands, penalties, or fees assessed against the United States; (3) costs, expenses, and damages incurred by the United States; or (4) the release or threatened release of any solid waste, hazardous waste, hazardous materials, pollutant, contaminant, oil in any form, or petroleum product into the environment. The authorized officer may prescribe terms that allow the Holder to replace, repair, restore, or otherwise undertake necessary curative actions to mitigate damages in addition to or as an alternative to monetary indemnification.

I. BONDING. The authorized officer may require the Holder to furnish a surety bond or other security for any of the obligations imposed by the terms and conditions of this permit or any applicable law, regulation, or order.

V. RESOURCE PROTECTION

A. COMPLIANCE WITH ENVIRONMENTAL LAWS. The Holder shall in connection with the use or occupancy authorized by this permit comply with all applicable federal, state, and local environmental laws and regulations, including but not limited to those established pursuant to the Resource Conservation and Recovery Act, as amended, 42 U.S.C. 6901 et seq., the Federal Water Pollution Control Act, as amended, 33 U.S.C. 1251 et seq., the Oil Pollution Act, as amended, 33 U.S.C. 2701 et seq., the Clean Air Act, as amended, 42 U.S.C. 7401 et seq., CERCLA, as amended, 42 U.S.C. 9601 et seq., the Toxic Substances Control Act, as amended, 15 U.S.C. 2601 et seq., the Federal Insecticide, Fungicide, and Rodenticide Act, as amended, 7 U.S.C. 136 et seq., and the Safe Drinking Water Act, as amended, 42 U.S.C. 300f et seq.

B. VANDALISM. The Holder shall take reasonable measures to prevent and discourage vandalism and disorderly conduct and when necessary shall contact the appropriate law enforcement officer.

C. PESTICIDE USE. Pesticides may not be used outside of buildings to control undesirable woody and herbaceous vegetation (including aquatic plants), insects, rodents, fish, and other pests and weeds without prior written approval from the authorized officer. A request for approval of planned uses of pesticides shall be submitted annually by the Holder on the due date established by the authorized officer. The report shall cover a 12-month period of planned use beginning 3 months after the reporting date. Information essential for review shall be provided in the form specified. Exceptions to this schedule may be allowed, subject to emergency request and approval, only when unexpected outbreaks of pests or weeds require control measures that were not anticipated at the time an annual report was submitted. Only those materials registered by the U.S. Environmental Protection Agency for the specific purpose planned shall be considered for use on National Forest System lands. Label instructions and all applicable laws and regulations shall be strictly followed in the application of pesticides and disposal of excess materials and containers.

D. ARCHAEOLOGICAL-PALEONTOLOGICAL DISCOVERIES. The Holder shall immediately notify the authorized officer of all antiquities or other objects of historic or scientific interest, including but not limited to historic or prehistoric ruins, fossils, or artifacts discovered in connection with the use and occupancy authorized by this permit. The Holder shall leave these discoveries intact and in place until directed otherwise by the authorized officer. Protective and mitigative measures specified by the authorized officer shall be the responsibility

of the Holder.

E. NATIVE AMERICAN GRAVES PROTECTION AND REPATRIATION. In accordance with 25 U.S.C. 3002(d) and 43 CFR 10.4, if the Holder inadvertently discovers human remains, funerary objects, sacred objects, or objects of cultural patrimony on National Forest System lands, the Holder shall immediately cease work in the area of the discovery and shall make a reasonable effort to protect and secure the items. The Holder shall immediately notify the authorized officer by telephone of the discovery and shall follow up with written confirmation of the discovery. The activity that resulted in the inadvertent discovery may not resume until 30 days after the authorized officer certifies receipt of the written confirmation, if resumption of the activity is otherwise lawful, or at any time if a binding written agreement has been executed between the Forest Service and the affiliated Indian tribes that adopts a recovery plan for the human remains and objects.

F. PROTECTION OF HABITAT OF THREATENED, ENDANGERED, AND SENSITIVE SPECIES. The location of sites within the permit area needing special measures for protection of plants or animals listed as threatened or endangered under the Endangered Species Act (ESA) of 1973, 16 U.S.C. 1531 et seq., as amended, or identified as sensitive or otherwise requiring special protection by the Regional Forester under Forest Service Manual (FSM) 2670, pursuant to consultation conducted under section 7 of the ESA, may be shown on the ground or on a separate map. The map shall be attached to this permit as an appendix. The Holder shall take any protective and mitigative measures specified by the authorized officer. If protective and mitigative measures prove inadequate, if other sites within the permit area containing threatened, endangered, or sensitive species or species otherwise requiring special protection are discovered, or if new species are listed as threatened or endangered under the ESA or identified as sensitive or otherwise requiring special protection by the Regional Forester under the FSM, the authorized officer may specify additional protective and mitigative measures. Discovery of these sites by the Holder or the Forest Service shall be promptly reported to the other party.

G. CONSENT TO STORE HAZARDOUS MATERIALS. The Holder shall not store any hazardous materials at the site without prior written approval from the authorized officer. This approval shall not be unreasonably withheld. If the authorized officer provides approval, this permit shall include, or in the case of approval provided after this permit is issued, shall be amended to include specific terms addressing the storage of hazardous materials, including the specific type of materials to be stored, the volume, the type of storage, and a spill plan. Such terms shall be proposed by the Holder and are subject to approval by the authorized officer.

H. CERTIFICATION UPON REVOCATION OR TERMINATION. If the Holder uses or stores hazardous materials at the site, upon revocation or termination of this permit the Holder shall provide the Forest Service with a report certified by a professional or professionals acceptable to the Forest Service that the permit area is uncontaminated by the presence of hazardous materials and that there has not been a release or discharge of hazardous materials upon the permit area, into surface water at or near the permit area, or into groundwater below the permit area during the term of the permit. This certification requirement may be waived by the authorized officer when the Forest Service determines that the risks posed by the hazardous material are minimal. If a release or discharge has occurred, the professional or professionals shall document and certify that the release or discharge has been fully remediated and that the permit area is in compliance with all federal, state, and local laws and regulations.

VI. LAND USE FEE AND ACCOUNTING ISSUES

A. LAND USE FEES. The use or occupancy authorized by this permit is exempt from a land use fee or the land use fee has been waived in full pursuant to 36 CFR 251.57 and Forest Service Handbook 2709.11, Chapter 30.

B. MODIFICATION OF THE LAND USE FEE. The land use fee may be revised whenever necessary to reflect the market value of the authorized use or occupancy or when the fee system used to calculate the land use fee is modified or replaced.

C. FEE PAYMENT ISSUES.

~~1. Crediting of Payments. Payments shall be credited on the date received by the deposit facility, except that if a payment is received on a non-workday, the payment shall not be credited until the next workday.~~

~~2. Disputed Fees. Fees are due and payable by the due date. Disputed fees must be paid in full. Adjustments will be made if dictated by an administrative appeal decision, a court decision, or settlement terms.~~

~~3. Late Payments~~

~~(a) Interest. Pursuant to 31 U.S.C. 3717 et seq., interest shall be charged on any fee amount not paid within 30 days from the date it became due. The rate of interest assessed shall be the higher of the Prompt Payment Act rate or the rate of the current value of funds to the Treasury (i.e., the Treasury tax and loan account rate), as prescribed and published annually or quarterly by the Secretary of the Treasury in the Federal Register and the Treasury Fiscal Requirements Manual Bulletins. Interest on the principal shall accrue from the date the fee amount is due.~~

~~(b) Administrative Costs. If the account becomes delinquent, administrative costs to cover processing and handling the delinquency shall be assessed.~~

~~(c) Penalties. A penalty of 6% per annum shall be assessed on the total amount that is more than 90 days delinquent and shall accrue from the same date on which interest charges begin to accrue.~~

~~(d) Termination for Nonpayment. This permit shall terminate without the necessity of prior notice and opportunity to comply when any permit fee payment is 90 calendar days from the due date in arrears. The holder shall remain responsible for the delinquent fees.~~

~~4. Administrative Offset and Credit Reporting. Delinquent fees and other charges associated with the permit shall be subject to all rights and remedies afforded the United States pursuant to 31 U.S.C. 3711 et seq. and common law. Delinquencies are subject to any or all of the following:~~

~~(a) Administrative offset of payments due the holder from the Forest Service.~~

~~(b) If in excess of 60 days, referral to the Department of the Treasury for appropriate collection action as provided by 31 U.S.C. 3711(g)(1).~~

~~(c) Offset by the Secretary of the Treasury of any amount due the holder, as provided by 31 U.S.C. 3720 et seq.~~

~~(d) Disclosure to consumer or commercial credit reporting agencies.~~

VII. REVOCATION, SUSPENSION, AND TERMINATION

A. REVOCATION AND SUSPENSION. The authorized officer may revoke or suspend this permit in whole or in part:

1. For noncompliance with federal, state, or local law.
2. For noncompliance with the terms of this permit.
3. For abandonment or other failure of the Holder to exercise the privileges granted.
4. With the consent of the Holder.
5. For specific and compelling reasons in the public interest.

Prior to revocation or suspension, other than immediate suspension under clause VII.B, the authorized officer shall give the Holder written notice of the grounds for revocation or suspension. In the case of revocation or suspension based on clause VII.A.1, 2, or 3, the authorized officer shall give the Holder a reasonable time, typically not to exceed 90 days, to cure any noncompliance.

B. IMMEDIATE SUSPENSION. The authorized officer may immediately suspend this permit in whole or in part when necessary to protect public health or safety or the environment. The suspension decision shall be in writing. The Holder may request an on-site review with the authorized officer's supervisor of the adverse conditions prompting the suspension. The authorized officer's supervisor shall grant this request within 48 hours. Following the on-site review, the authorized officer's supervisor shall promptly affirm, modify, or cancel the suspension.

C APPEALS AND REMEDIES. Written decisions by the authorized officer relating to administration of this permit are subject to administrative appeal pursuant to 36 CFR Part 214 as amended. Revocation or suspension of this permit shall not give rise to any claim for damages by the Holder against the Forest Service.

D. TERMINATION. This permit shall terminate when by its terms a fixed or agreed upon condition, event, or time occurs without any action by the authorized officer. Examples include but are not limited to expiration of the permit by its terms on a specified date and termination upon change of control of the business entity. Termination of this permit shall not require notice, a decision document, or any environmental analysis or other documentation. Termination of this permit is not subject to administrative appeal and shall not give rise to any claim for damages by the Holder against the Forest Service.

. RIGHTS AND RESPONSIBILITIES UPON REVOCATION OR TERMINATION WITHOUT RENEWAL. Upon revocation or termination of this permit without renewal of the authorized use, the Holder shall remove all structures and improvements, except those owned by the United States, within a reasonable period prescribed by the authorized officer and shall restore the site to the satisfaction of the authorized officer. If the Holder fails to remove all

structures and improvements within the prescribed period, they shall become the property of the United States and may be sold, destroyed, or otherwise disposed of without any liability to the United States. However, the Holder shall remain liable for all costs associated with their removal, including costs of sale and impoundment, cleanup, and restoration of the site.

VIII. MISCELLANEOUS PROVISIONS

A. MEMBERS OF CONGRESS. No member of or delegate to Congress or resident commissioner shall benefit from this permit either directly or indirectly, except to the extent the authorized use provides a general benefit to a corporation.

B. CURRENT ADDRESSES. The Holder and the Forest Service shall keep each other informed of current mailing addresses, including those necessary for billing and payment of land use fees.

C. SUPERIOR CLAUSES. If there is a conflict between any of the preceding printed clauses and any of the following clauses, the preceding printed clauses shall control.

. Fees - Exemptions and Waivers *(A-10)*. The use or occupancy authorized by this permit is exempt from a land use fee or the land use fee has been waived in full pursuant to 36 CFR 251.57 and Forest Service Handbook 2709.11, chapter 30. Every 5 years, the Authorized Officer shall review the criteria for a land use fee waiver, and if they no longer apply, shall charge the full land use fee.

2. Surveys, Land Corners *(D-4)*. The Holder shall protect, in place, all public land survey monuments, private property corners, and Forest boundary markers. In the event that any such land markers or monuments are destroyed in the exercise of the privileges permitted by this authorization, depending on the type of monument destroyed, the Holder shall see that they are reestablished or referenced in accordance with (1) the procedures outlined in the "Manual of Instructions for the Survey of the Public Land of the United States," (2) the specifications of the county surveyor, or (3) the specifications of the Forest Service.

Further, the Holder shall cause such official survey records as are affected to be amended as provided by law. Nothing in this clause shall relieve the Holder's liability for the willful destruction or modification of any Government survey marker as provided at 18 U.S.C. 1858.

3. Improvement Relocation *(X-33)*. This authorization is granted with the express understanding that should future location of United States Government-owned improvements or road rights-of-way require the relocation of the Holder's improvements, such relocation will be done by, and at the expense of, the Holder within a reasonable time as specified by the Authorized Officer.

4. Construction Stipulations. Construction Stipulations, described as **Exhibit B**, is attached hereto and made a part hereof.

THIS PERMIT IS ACCEPTED SUBJECT TO ALL ITS TERMS AND CONDITIONS.

BEFORE ANY PERMIT IS ISSUED TO AN ENTITY, DOCUMENTATION MUST BE PROVIDED TO THE AUTHORIZED OFFICER OF THE AUTHORITY OF THE SIGNATORY FOR THE ENTITY TO BIND IT TO THE TERMS AND CONDITIONS OF THE PERMIT.

ACCEPTED:

SAN MIGUEL POWER ASSOCIATION

By: Jeremy Fox

JEREMY FOX
Service Planning Supervisor

Date: 8/23/16

APPROVED:

U.S. DEPARTMENT OF AGRICULTURE
Forest Service

By: _____

MATTHEW D. ZUMSTEIN
District Ranger
Norwood Ranger District

Date: _____

According to the Paperwork Reduction Act of 1995, an agency may not conduct or sponsor, and a person is not required to respond to a collection of information unless it displays a valid OMB control number. The valid OMB control number for this information collection is 0596-0082. The time required to complete this information collection is estimated to average one hour per response, including the time for reviewing instructions, searching existing data sources, gathering and maintaining the data needed, and completing and reviewing the collection of information.

The U.S. Department of Agriculture (USDA) prohibits discrimination in all its programs and activities on the basis of race, color, national origin, gender, religion, age, disability, political beliefs, sexual orientation, and marital or family status. (Not all prohibited bases apply to all programs.) Persons with disabilities who require alternative means for communication of program information (Braille, large print, audiotape, etc.) should contact USDA's TARGET Center at 202-720-2600 (voice and TDD).

To file a complaint of discrimination, write USDA, Director, Office of Civil Rights, 1400 Independence Avenue, SW, Washington, DC 20250-9410 or call (800) 975-3272 (voice) or (202) 720-6382 (TDD). USDA is an equal opportunity provider and employer

The Privacy Act of 1974 (5 U.S.C. 552a) and the Freedom of Information Act (5 U.S.C. 552) govern the confidentiality to be provided for information received by the Forest Service.

Construction Stipulations
San Miguel Power Association
Exhibit B

THIS STIPULATION is dated this _____day of _____, 20___, between the ***United States of America***, acting by and through the United States Forest Service, Department of Agriculture (hereinafter referred to as the "USFS"); and the ***San Miguel Power Association,*** (hereinafter referred to as "SMPA").

SMPA is the Grantee under that certain Federal Land Policy and Management Act Special Use Permit dated_____, from the USFS, Grantor, a copy of which is attached hereto (hereinafter referred to as the "Permit").

SMPA agrees to the following terms and conditions, and the USFS hereby authorizes the Stipulations to proceed in accordance with these terms and conditions.

1. ***General Stipulations.***

   a. SMPA shall perform any permit related maintenance on the permit area, in a manner which reasonably causes the least amount of disturbance to the permit area.
   b. All trash and debris generated by the use of the permit area will be removed immediately.
   c. SMPA shall not cut or remove any trees from within the permit area without having received the prior written approval of the USFS; USFS may withhold its approval for any reasonable purpose.
   d. This Stipulation does not allow for the storage of hazardous materials, such as but not limited to, gasoline, oil, antifreeze, and hydraulic fluids.
   e. Markers indicating buried cable should be located with consideration of visual quality.
   f. SMPA shall take precautionary measures to insure public safety during construction along permitted roads. These measures may require the use of flagman and/or warning signs during construction activities.
   g. SMPA shall fully repair all damage, other than ordinary wear and tear, caused by SMPA in exercising the privileges granted by this permit.
   h. All disturbed areas will be reseeded with an approved weed free seed mix.
   i. Equipment shall be power washed prior to entry on to the National Forest, to minimize the introduction of noxious weed seed.

2. ***Construction on Galloping Goose Trail.***

   a. Galloping Goose Trail Crossing on the Ilium Valley Road (Reference Galloping Goose Trailhead on Sheet C104, Exhibit A Maps). For this crossing:
      1. Flagging people around this with an open trench is a safety concern, so close this small section of trail for the trench work AFTER the Blues and Brews Festival 2nd week in September.
      2. Do not close the trail on a weekend day.

b. Galloping Goose Trail segment on Sheet C106, Exhibit A Maps:
    1. Because of the safety concern with the public and open trenches, the trail should be closed during construction. Ideally, we would only want the trail closed starting the 2nd week in October. This will avoid Blue and Brews Festival and color watching. The use drops considerably starting the 2nd week in October.

3. ***Press Releases.*** SMPA will provide press releases to the Daily Planet and KOTO announcing the closure dates.

4. ***Notices.*** Any notices permitted or required under this Stipulation shall be addressed to the parties at the following addresses:

San Miguel Power Association, Inc.
Jeremy Fox, Service Planning Supervisor
PO Box 1150
Ridgway, CO 81432
(970) 626-5549, ext. 202
Jeremy@smpa.com

And addressed to the USFS at:

US Forest Service
Norwood Ranger District
Matt Zumstein, Norwood District Ranger
P.O. Box 388
Norwood, CO 81423
(970) 327-4261, ext. 4342
mzumstein@fs.fed.us

5. ***Start of Construction.*** SMPA shall give the USFS at least 48 hours notification prior to the start of construction. Also provided will be the name and phone number of SMPA's representative responsible for the construction operations.

The parties hereto have accepted these Stipulations subject to the conditions set out above. This Stipulation may also be amended by mutual agreement when signed and dated by SMPA and the USFS.

Jeremy Fox 8/23/16

SAN MIGUEL POWER ASSOCIATION, INC. Date
Jeremy Fox
Service Planning Supervisor

U.S. DEPARTMENT OF AGRICULTURE
FOREST SERVICE

MATTHEW D. ZUMSTEIN Date
District Ranger
Norwood Ranger District

CATEGORICAL EXCLUSION REVIEW AND DECISION MEMO
SAN MIGUEL POWER ASSOCIATION ILIUM VALLEY UPGRADE PROJECT
Grand Mesa, Uncompaghre and Gunnison National Forests
Norwood Ranger District
San Miguel County, Colorado

Date: August 24, 2016

Authorized Officer: Matthew D. Zumstein, District Ranger, Norwood Ranger District

Name of Project or Authorization: San Miguel Power Association Ilium Valley Upgrade Project

Location of Project: N.M.P.M., T. 42 N., R. 9 W., Sections 6, 7, 18 and 19; N.M.P.M., T. 43 N., R. 9 W., Sections 31 and 32, San Miguel County, Colorado.

Description of Project or Authorization: San Miguel Power Association (SMPA) has a need to provide a redundant source of electric power between the Sunshine and Telluride Substations. To accomplish this, SMPA will bury 24.9 kV lines in the Ilium Valley area, mostly along the Ilium Valley Road and previously disturbed areas. The temporary right-of-way width will be 40' wide and will be reduced to a permanent 20' wide right-of-way width post construction. This will provide a reliable source of electricty to the communities of Telluride and Mountain Village. See attached maps.

Evaluation of Extraordinary Circumstances
The following table documents environmental compliance for projects categorically excluded under NEPA.

Evaluation of Extraordinary Circumstances for the Proposal (36 CFR 220.6(a))				
Resource Conditions (36 CFR 220.6(b)(1))	**Resource Condition Present?**[1]		**Evaluation**[1] (36 CFR 220.6(b)(2))	**References** Required for CE categories under 36 CFR 220.6(e).
	Yes	No		
Federally listed threatened or endangered terrestrial wildlife species or their designated critical habitat, species proposed for Federal listing or proposed critical habitat or FS sensitive species. 36 CFR 220.6(b)(1)(i)		X	No Federally listed threatened or endangered, proposed or sensitive wildlife species or critical habitats will be affected by this proposal.	May affect but is not likely to adversely affect Canada lynx. BA/BE/MIS completed by Luke Holguin on 8/16/2016.
Floodplains, wetlands or municipal watersheds. 36 CFR 220.6(b)(1)((ii)		X	No floodplains, wetlands or municipal watersheds will be affected by this action.	Forest GIS Layer
Congressionally designated areas[2] such as wilderness, wilderness study areas, or national recreation areas. 36 CFR 220.6(b)(1)((iii)		X	No Congressionally designated areas will be affected directly or indirectly by this action.	Forest GIS Layer
Colorado Roadless Areas [3] or potential wilderness areas. 36 CFR 220.6(b)(1)((iv), 36 CFR Part 294		X	CRAs/IRAs will not be affected directly or indirectly by this action.	Forest GIS Layer

Evaluation of Extraordinary Circumstances for the Proposal (36 CFR 220.6(a))				
Resource Conditions (36 CFR 220.6(b)(1))	**Resource Condition Present?**[1]		**Evaluation**[1] (36 CFR 220.6(b)(2))	**References** Required for CE categories under 36 CFR 220.6(e).
	Yes	No		
Research natural areas[2]. 36 CFR 220.6(b)(1) (v)		X	RNAs will not be affected by this action.	Forest GIS Layer
American Indians and Alaska Native religious or cultural sites. 36 CFR 220.6(b)(1) (vi)		X	No traditional cultural properties, religious or cultural sites have been identified that would be affected by implementation of this action.	The District Ranger has determined that tribal consultation is not needed for this project.
Archaeological sites, or historic properties or areas. 36 CFR 220.6(b) (b)(1)((vii)		X	No archeological sites or sites eligible for National Historic Register listing will be affected directly or indirectly by this action.	No potential to affect. SHPO concurrance letter signed by Steve Turner on 7/15/16.

[1] The mere presence of one or more of these resource conditions does not preclude the use of a categorical exclusion. It is the existence of a cause effect relationship between a proposed action and the potential effect on these resource conditions, and if such a relationship exists, the degree of the potential effect of a proposed action these resource conditions that determines whether extraordinary circumstances exist.
[2] If present, verify authorities. Additional requirements may exist.
[3] Roadless consultations with RO is required except for limited circumstances. Submit completed forms to NEPA coordinator.

Categories of Actions Excluded from Documentation
This proposed action falls under the categories established by the Chief, FSH 1909.15, Section. 32.2 #3: Approval, modification, or continuation of minor special uses of NFS lands that require less than five contiguous acres of land. These activities are to be categorically excluded from documentation in an Environmental Impact Statement or an Environmental Assessment and through the process of scoping, no extraordinary circumstances significantly affecting the environment were found to exist.

Scoping Efforts
Adjoining landowners and the San Miguel Board of County Commissioners were contacted on June 23, 2016 and this project was also published in the Schedule of Proposed Actions on June 22, 2016. No comments were received.

Findings Required by Other Laws
This project is consistent with Grand Mesa, Uncompahgre and Gunnison National Forests Land Management Plan standards and guidelines for the area. (Amended Land and Resource Management Plan, Forest Direction III, page 71):

1. Act on special use applications according to the following priorities:
    a. Land and land use activity requests relating to public safety, health and welfare, e.g., highways, power lines, and public service improvements.
    b. Land and land use activities contributing to increased economic activity associated with National Forest resources, e.g., oil and gas, and energy minerals.
    c. Land and land use activities that benefit only private users, e.g. road permits, right-of-ways for power lines, telephones, waterlines, etc.

The project falls within Management Area 4B which is managed for wildlife habitat. Semi-primitive non-motorized, semi-primitive motorized and roaded natual recreation opportunities will be provided.

Implementation
The responsible official intends to implement the decision and any conditions related to implementation on August 29, 2016.

Opportunities for Administrative Review or Appeal
This decision is not subject to further review or appeal per 36 CFR 214.4 (c).

For Additional Information Contact: Matthew D. Zumstein, District Ranger at the Norwood Ranger District, PO Box 388, Norwood, CO 81423 or at (970) 327-4261 or mzumstein@fs.fed.us.

Decision and Finding
I am approving the proposed issuance of the San Miguel Power Associations Special Use Permit. I have considered the above listed resource conditions and have determined there are no extraordinary circumstances related to the proposed action that warrant further analysis or documentation in either an environmental assessment or environmental impact statement. None of the extraordinary circumstances described in 36 CFR 220.6 (b) exist.

Signature_____ **Date**: 08/24/16

MATTHEW D. ZUMSTEIN
District Ranger
Norwood Ranger District

Dewatering Discharge in Well-Vegetated Upland Area

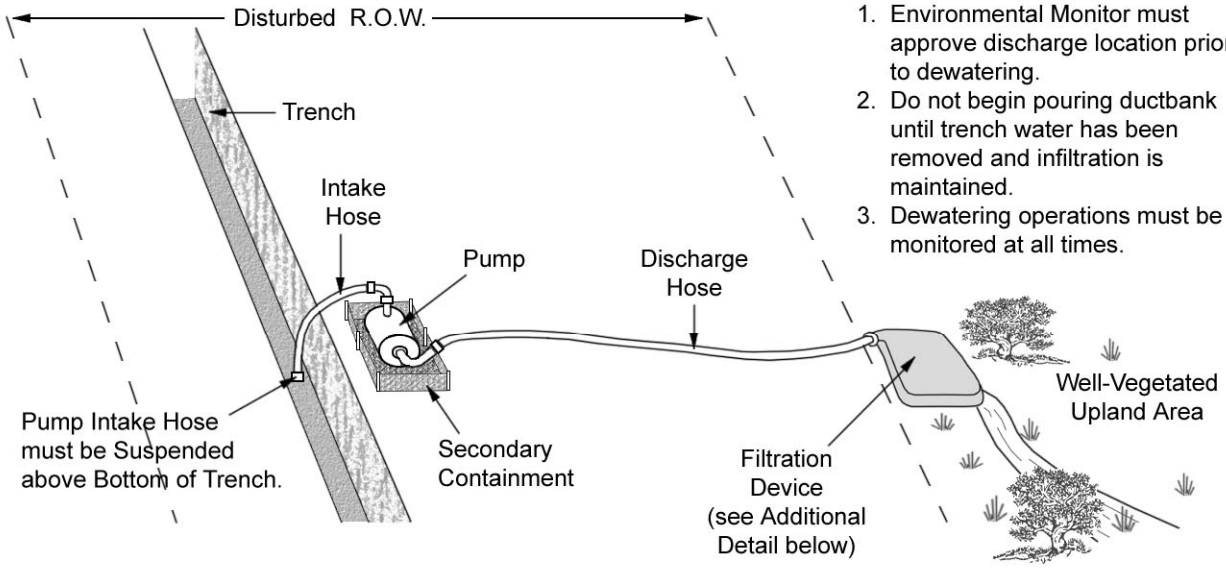

NOTES:

1. Environmental Monitor must approve discharge location prior to dewatering.
2. Do not begin pouring ductbank until trench water has been removed and infiltration is maintained.
3. Dewatering operations must be monitored at all times.

Geotextile Filter Bag

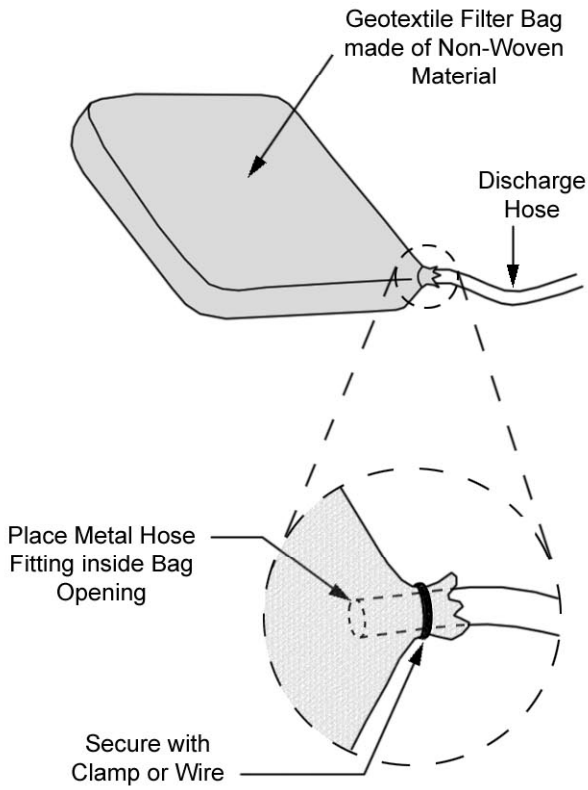

Straw Bale Dewatering Structure

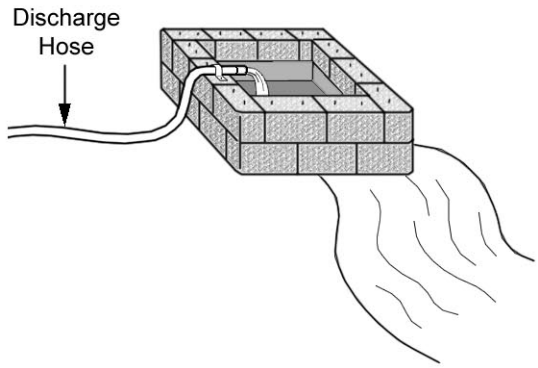

NOTES:

1. Line first layer of straw bales with geotextile fabric.
2. Straw bales must be staked-in and tightly abutted.
3. Use only weed-free straw.

TRI-STATE GENERATION AND TRANSMISSION ASSOCIATION
A Touchstone Energy® Cooperative

NUCLA-SUNSHINE Transmission Line
Figure 9 Typical Dewatering Measures

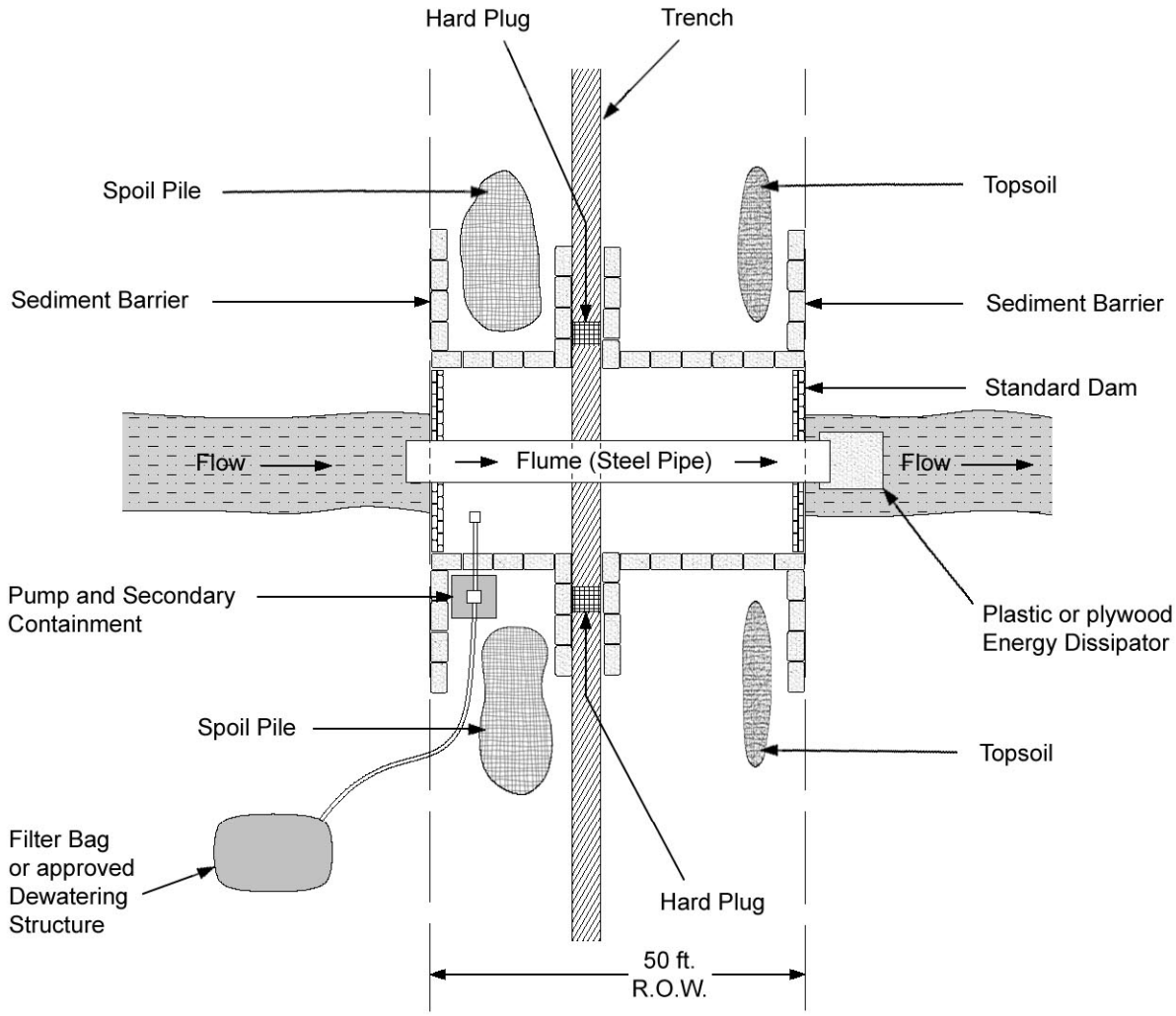

NOTES:

1. Install sediment barrier before installing flume.
2. Remove top 12 inches of topsoil from trench line only.
3. Store topsoil and spoil piles behind sediment barrier such as silt fence or weed-free straw bales.
4. Remove trench water and discharge to a level upland area prior to pouring concrete. Verify that dewatering discharge does not backflow into streambed. See Dewatering Detail for more information.
5. Pour concrete only when trench is dry. Backfill as soon as possible after concrete is poured.
6. Size flume to handle 150% of anticipated flow.
7. Use plastic or plywood energy dissipator at flume outlet when necessary to prevent scour.
8. Leave hard plugs in place until flume is sealed and functioning.

Source: View Point West, 2009

(Not to Scale)

TRI-STATE GENERATION AND TRANSMISSION ASSOCIATION
A Touchstone Energy® Cooperative

NUCLA-SUNSHINE Transmission Line

Figure 6 Typical Water Body Crossing - Flume

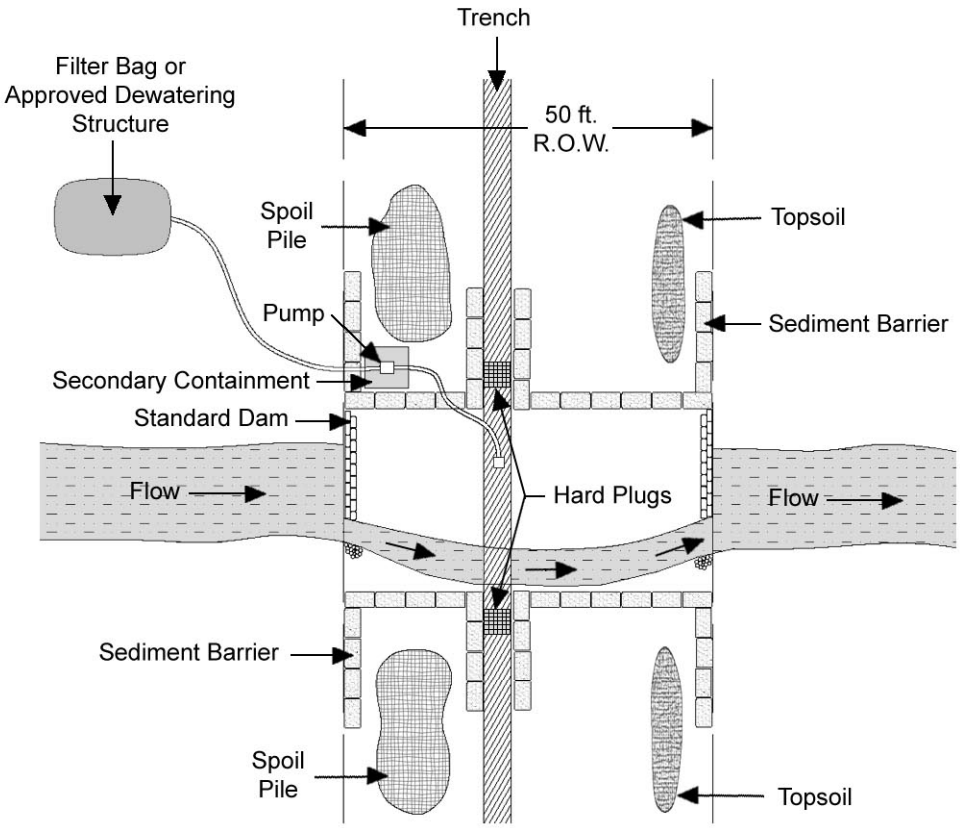

NOTES:

1. Store spoil piles behind a sediment barrier such as a silt fence or weed-free straw bales.
2. Remove top 12 inches of topsoil from trench line only.
3. Leave hard plugs in place until diversion is functioning.
4. Remove Trench water and discharge to a level upland area prior to pouring concrete. See dewatering detail for additional information.

Source: View Point West, 2009

(Not to Scale)

TRI-STATE GENERATION AND TRANSMISSION ASSOCIATION
A Touchstone Energy® Cooperative

NUCLA-SUNSHINE Transmission Line
Figure 7 Typical Water Body Crossing - Diversion

TELLURIDE SEEDING SPECIFICATIONS

The formula used for determining the quantity of pure live seed (PLS) is:

Pounds of Seed x (Purity x Germination) = Pounds of Pure Live Seed (PLS)

The required application rate for revegetation seeding is 1.5 pounds PLS per 1,000 square feet (65 pounds PLS per acre) for all surface seeding (i.e., broadcasting or hydroseeding). One of the two seed mixes that follow shall be used at the following rates for broadcasting or hydroseeding.

Option 1:

Species	Variety	Origin	Lbs/Ac
Wild-Canada ryegrass	VNS	CO	3.34
June grass	VNS	CO	3.74
Western wheatgrass	ARRIBA	CO	3.30
White yarrow	ACHUILLEA MILLEF	CA	3.31
Rocky Mountain Penstemon	BANDERA	CO	3.60
Tufted hairgrass		CAN	4.63
Mountain brome	BROMAR	WA	17.65
Beardless wheatgrass	WHITMAR	WA	3.41
Slender wheatgrass	PRYOR	MT	15.53
Alpine bluegrass	VNS	CAN	6.49
			65.00

Option 2:

Species	Origin	Lbs/Ac
White yarrow	CA	3.31
Rocky Mountain Penstemon	CO	3.65
Slender wheat, Pryor	WA	10.24
Mountain brome, Bromar	WA	11.80
Tufted hairgrass	CAN	3.07
Big bluegrass, Sherman	WA	11.82
Streambank wheat, Sodar	WA	9.00
Alpine bluegrass	CAN	3.00
Arizona fescue, Redondo	CO	5.82
Wildrye, Elkton	WA	3.29
		65.00

Seeding may be accomplished using standard hydromulch procedures. Alternatively, the seed may be hand broadcast and raked in. Broadcasting will require the following procedure: (1) soak the seed in water for 2 to 3 days to promote germination. (2) Cover the seeded area immediately with straw matting with jute or other natural fiber netting. No plastics are permitted. Certified, weed-free loose straw may only be used if the slopes are less than 3-to-1 and the site is artificially irrigated so that the straw will be wet and cannot blow. (3) Secure matting edges with metal landscaping stakes (1 inch by 6 inches) placed every two feet on all sides. Begin installation at the base of the slope and continue to the top so that overlapping sections are shingled. Overlaps should be no less than 4 inches.

After one year, inspect the seeded area and rework where vegetation has not emerged.

www.invarion.com

SMPA MHT #1
One Lane Road
Ilium Rd.
Existing Speed 35 MPH
Scope of Work: Underground
Power Lines.

Permit #_____

Expiration_____

Non-crashworthy items shall be stored outside clear zone No work allowed on legal holidays, or during periods of adverse weather conditions.
Emergency Vehicles shall have access thru work zone & Bicyclists shall share the roadway. Warning Lights shall be used for nighttime per MUTCD

MHT may be used in conjunction will all other MHT's on this project.
MHT may be used in either direction

CROSSING LIVE LANES OF TRAFFIC SHALL BE PROHIBITED BY ALL JOB SITE EMPLOYEES UNLESS THE PROPER TRAFFIC CONTROL IS PROVIDED BY THE TRAFFIC CONTROL SUPERVISOR ON SITE. ALL WORK SHALL BE DONE IN ACCORDANCE TO THE MUTCD. FINAL WILL DEPEND ON SITE AND SAFETY.

Alert Traffic Control, Inc.
543 Sower Dr
Bayfield, CO 81122
Prepared By:Trudy Coons
Office: 970-884-0578
Fax: 970-884-0590
tcoons@alertraffic.com
Date Prepared: 9/9/16
Signature:

Trudy Coons

County Reviewed and Accepted:

Contractor

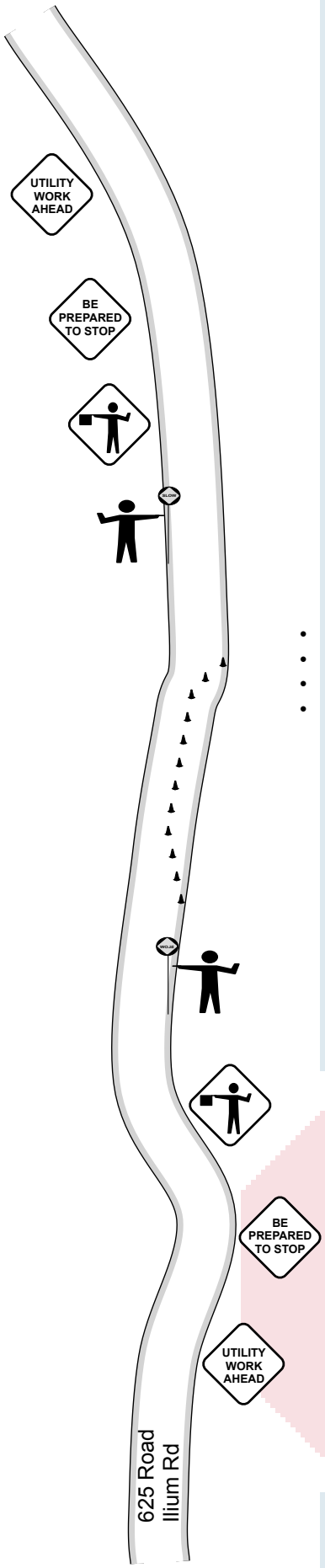

Not To Scale

Tabulation

- 2 x be prepared to stop W20-7b
- 25 x Cone
- 2 x flagger W20-7a
- 2 x flagger
- 2 x utility work ahead W21-7

Taper 50 to 100' Max
Taper Spacing 20'
Tangent Spacing 70'
Sign Spacing 500'

www.invarion.com

SMPA MHT #2
Shoulder
Ilium Rd.
Existing Speed 35 MPH
Scope of Work: Underground
Power Lines.

Permit #_____

Expiration_____

Non-crashworthy items shall be stored outside clear zone No work allowed on legal holidays, or during periods of adverse weather conditions.
Emergency Vehicles shall have access thru work zone & Bicyclists shall share the roadway. Warning Lights shall be used for nighttime per MUTCD

MHT may be used in conjunction will all other MHT's on this project.
MHT may be used in either direction

CROSSING LIVE LANES OF TRAFFIC SHALL BE PROHIBITED BY ALL JOB SITE EMPLOYEES UNLESS THE PROPER TRAFFIC CONTROL IS PROVIDED BY THE TRAFFIC CONTROL SUPERVISOR ON SITE. ALL WORK SHALL BE DONE IN ACCORDANCE TO THE MUTCD. FINAL WILL DEPEND ON SITE AND SAFETY.

Alert Traffic Control, Inc.
543 Sower Dr
Bayfield, CO 81122
Prepared By:Trudy Coons
Office: 970-884-0578
Fax: 970-884-0590
tcoons@alertraffic.com
Date Prepared: 9/9/16
Signature:

Trudy Coons

County Reviewed and Accepted:

Contractor

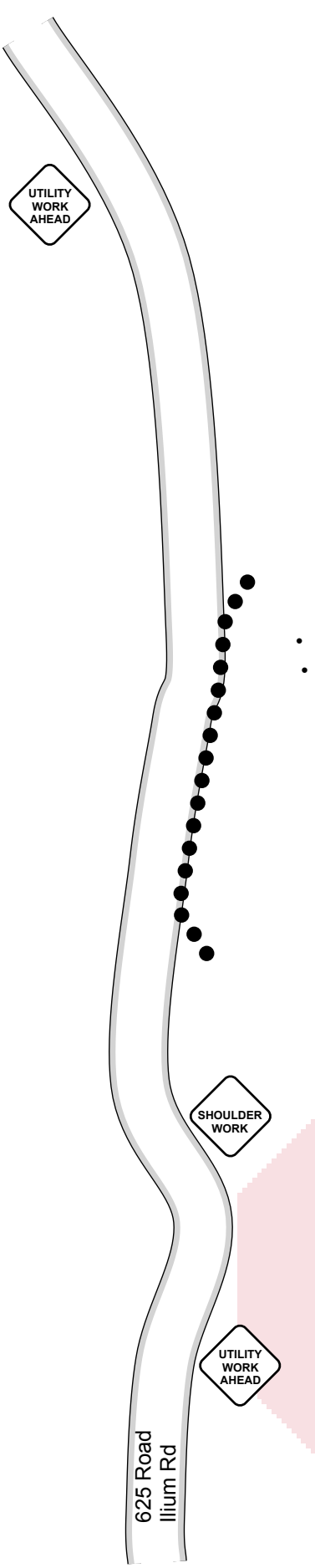

Not To Scale

Tabulation

2 x utility work ahead W21-7
1 x shoulder work W21-5
Drums as Needed
Lights for Drums

Taper 33'
Taper Spacing 10'
Tangent Spacing 20'
Sign Spacing 500'

www.invarion.com

SMPA MHT #3
Closure
Ilium Rd.
Existing Speed 35 MPH
Scope of Work: Underground Power Lines.

Permit #_____

Expiration_____

Non-crashworthy items shall be stored outside clear zone No work allowed on legal holidays, or during periods of adverse weather conditions.
Emergency Vehicles shall have access thru work zone & Bicyclists shall share the roadway. Warning Lights shall be used for nighttime per MUTCD

MHT may be used in conjunction will all other MHT's on this project.
MHT may be used in either direction

CROSSING LIVE LANES OF TRAFFIC SHALL BE PROHIBITED BY ALL JOB SITE EMPLOYEES UNLESS THE PROPER TRAFFIC CONTROL IS PROVIDED BY THE TRAFFIC CONTROL SUPERVISOR ON SITE. ALL WORK SHALL BE DONE IN ACCORDANCE TO THE MUTCD. FINAL WILL DEPEND ON SITE AND SAFETY.

Alert Traffic Control, Inc.
543 Sower Dr
Bayfield, CO 81122
Prepared By:Trudy Coons
Office: 970-884-0578
Fax: 970-884-0590
tcoons@alertraffic.com
Date Prepared: 9/9/16
Signature:

County Reviewed and Accepted:

Contractor

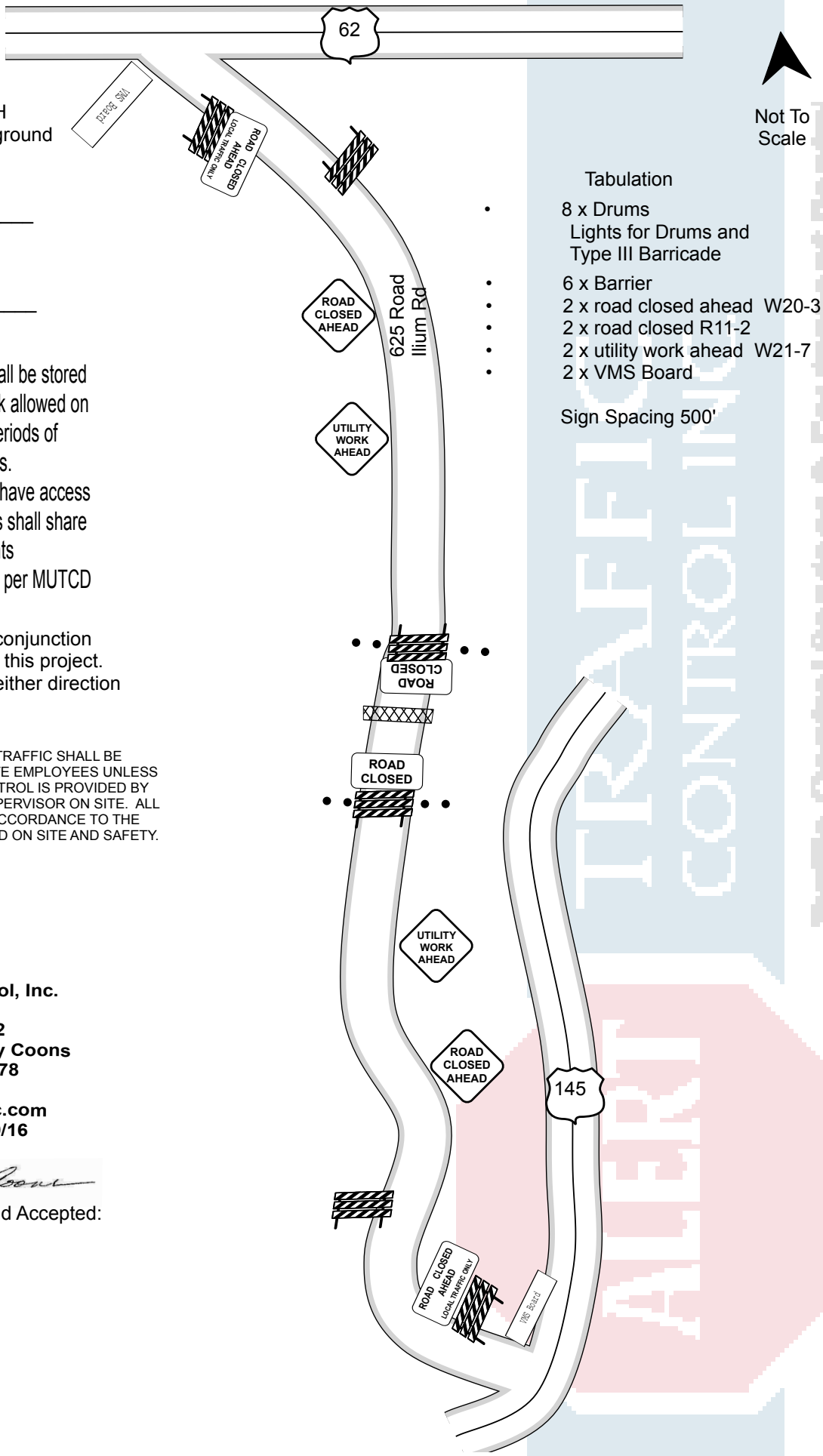

Tabulation

- 8 x Drums
  Lights for Drums and Type III Barricade
- 6 x Barrier
- 2 x road closed ahead W20-3
- 2 x road closed R11-2
- 2 x utility work ahead W21-7
- 2 x VMS Board

Sign Spacing 500'

www.invarion.com

SMPA MHT #4
Trail Closed
Ilium Rd.
Existing Speed 35 MPH
Scope of Work: Underground
Power Lines. Trail will
not be closed until
second week of October
and not on Weekend days.

Permit #_____

Expiration_____

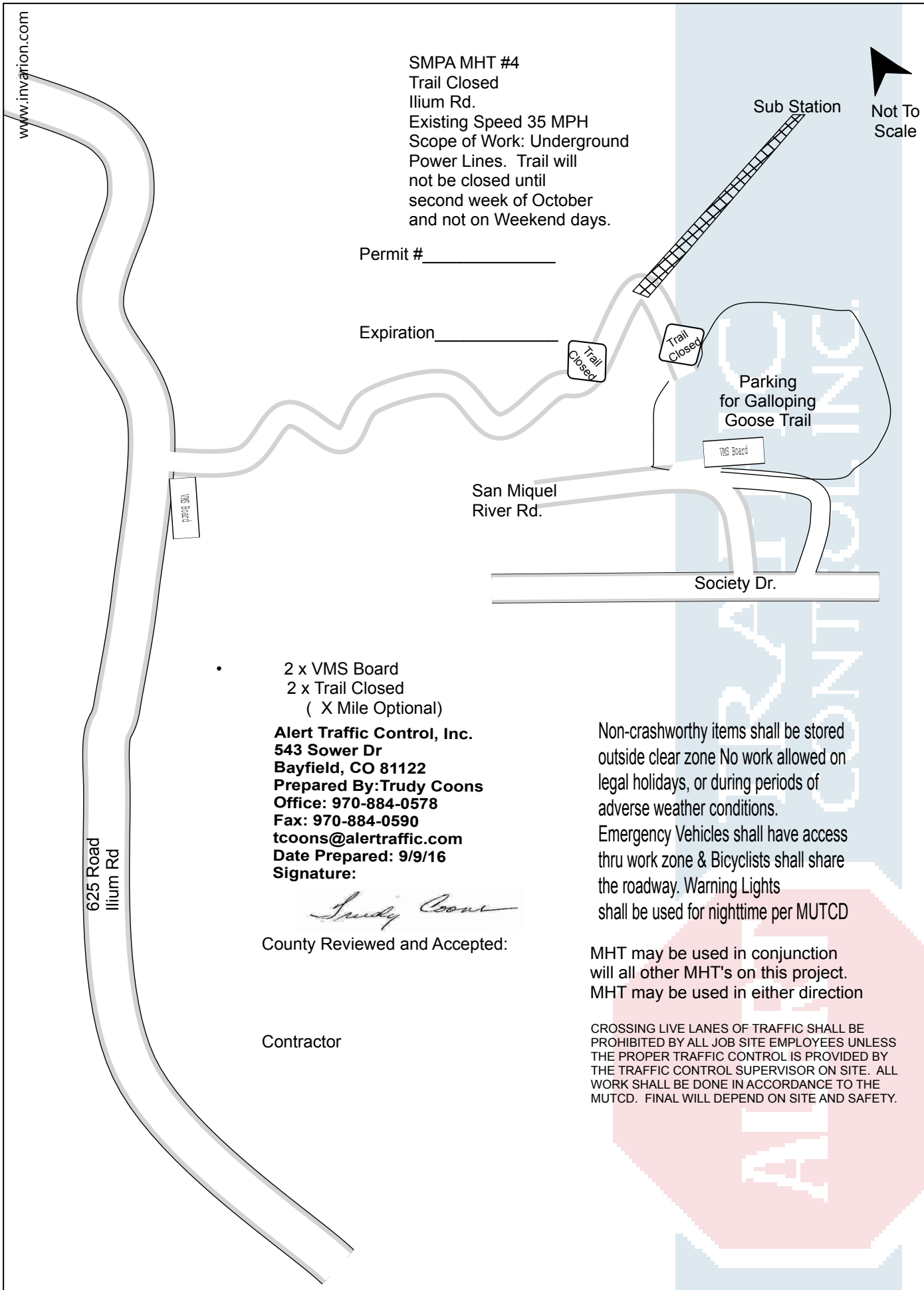

- 2 x VMS Board
  2 x Trail Closed
  (X Mile Optional)

Alert Traffic Control, Inc.
543 Sower Dr
Bayfield, CO 81122
Prepared By:Trudy Coons
Office: 970-884-0578
Fax: 970-884-0590
tcoons@alertraffic.com
Date Prepared: 9/9/16
Signature:

Trudy Coons

County Reviewed and Accepted:

Contractor

Non-crashworthy items shall be stored outside clear zone No work allowed on legal holidays, or during periods of adverse weather conditions. Emergency Vehicles shall have access thru work zone & Bicyclists shall share the roadway. Warning Lights shall be used for nighttime per MUTCD

MHT may be used in conjunction will all other MHT's on this project. MHT may be used in either direction

CROSSING LIVE LANES OF TRAFFIC SHALL BE PROHIBITED BY ALL JOB SITE EMPLOYEES UNLESS THE PROPER TRAFFIC CONTROL IS PROVIDED BY THE TRAFFIC CONTROL SUPERVISOR ON SITE. ALL WORK SHALL BE DONE IN ACCORDANCE TO THE MUTCD. FINAL WILL DEPEND ON SITE AND SAFETY.

www.invarion.com

SMPA MHT #5
Trail Closure
by Water Treatment Plant
on Society Dr.
Scope of Work: Underground
Power Lines. Trail will
not be closed until
second week of October
and not on Weekend days.

Permit #_____

Expiration_____

Not To Scale

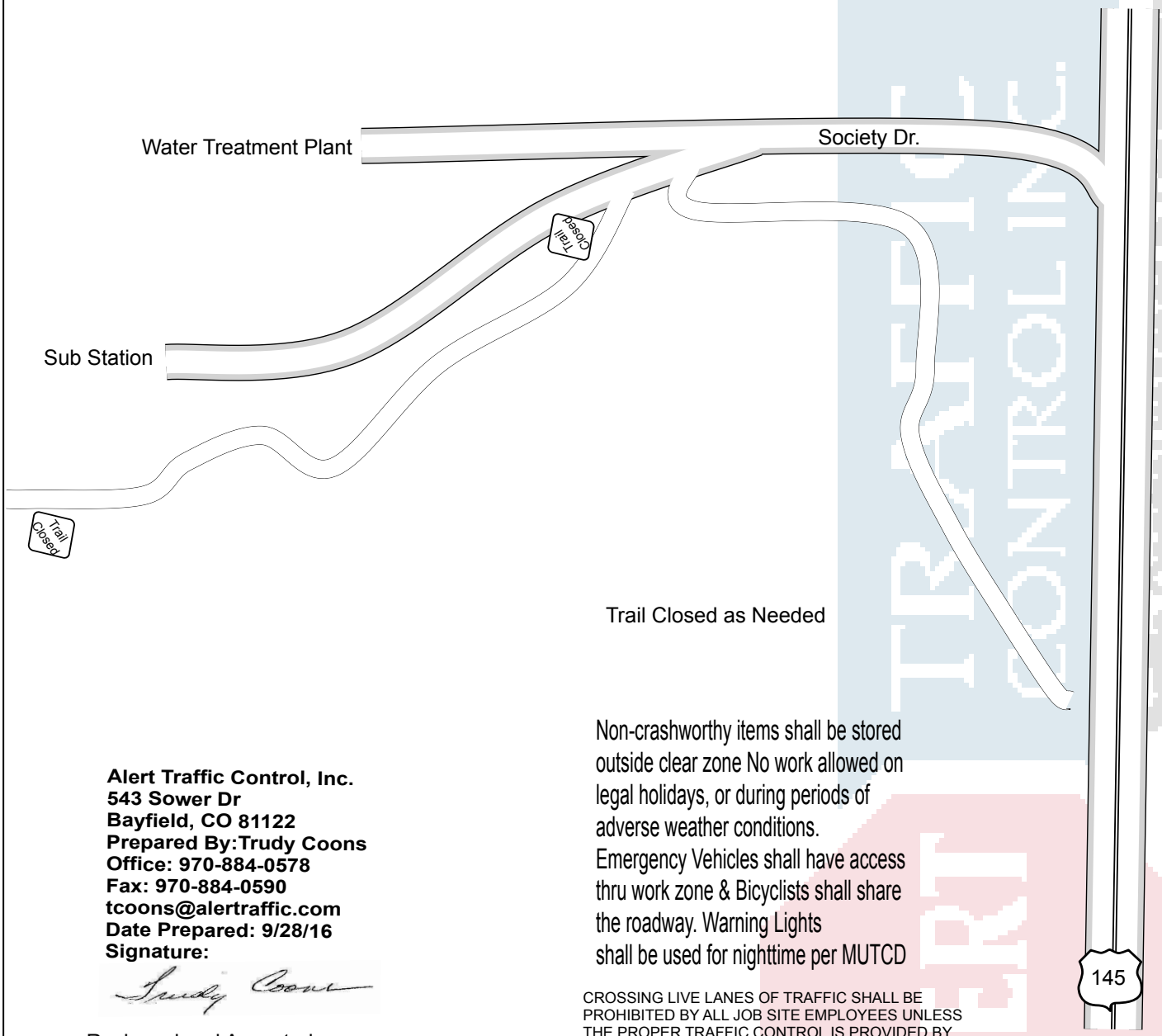

Trail Closed as Needed

Non-crashworthy items shall be stored outside clear zone No work allowed on legal holidays, or during periods of adverse weather conditions. Emergency Vehicles shall have access thru work zone & Bicyclists shall share the roadway. Warning Lights shall be used for nighttime per MUTCD

Alert Traffic Control, Inc.
543 Sower Dr
Bayfield, CO 81122
Prepared By:Trudy Coons
Office: 970-884-0578
Fax: 970-884-0590
tcoons@alertraffic.com

Date Prepared: 9/28/16
Signature:

Reviewed and Accepted:

Contractor

CROSSING LIVE LANES OF TRAFFIC SHALL BE PROHIBITED BY ALL JOB SITE EMPLOYEES UNLESS THE PROPER TRAFFIC CONTROL IS PROVIDED BY THE TRAFFIC CONTROL SUPERVISOR ON SITE. ALL WORK SHALL BE DONE IN ACCORDANCE TO THE MUTCD. FINAL WILL DEPEND ON SITE AND SAFETY.

www.invarion.com

SMPA MHT #6
Trail Closure
Ilium Road Trail Head
Scope of Work: Underground Power Lines. Trail will not be closed until second week of October and not on Weekend days.

Permit #_____

Expiration_____

CROSSING LIVE LANES OF TRAFFIC SHALL BE PROHIBITED BY ALL JOB SITE EMPLOYEES UNLESS THE PROPER TRAFFIC CONTROL IS PROVIDED BY THE TRAFFIC CONTROL SUPERVISOR ON SITE. ALL WORK SHALL BE DONE IN ACCORDANCE TO THE MUTCD. FINAL WILL DEPEND ON SITE AND SAFETY.

Trail Closed as needed

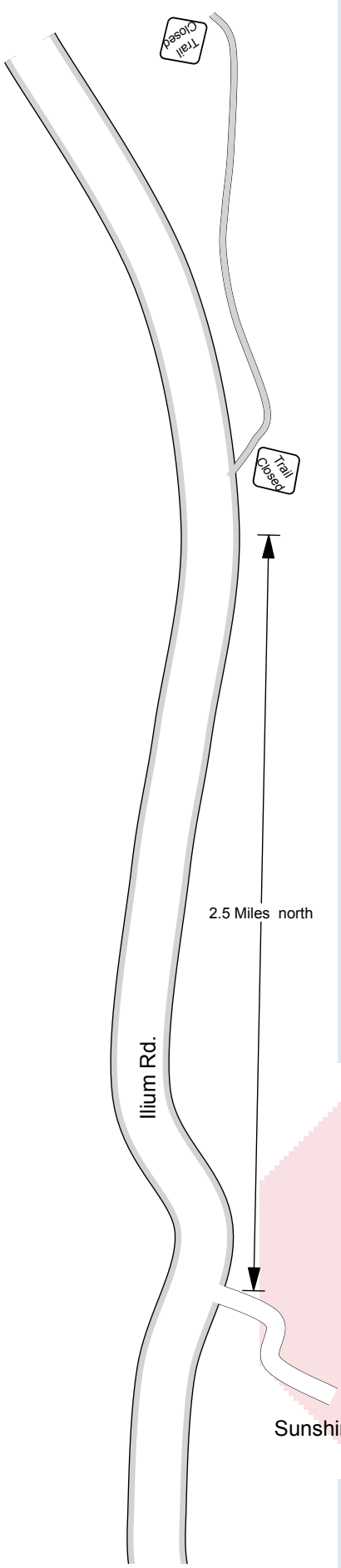

Not To Scale

Non-crashworthy items shall be stored outside clear zone No work allowed on legal holidays, or during periods of adverse weather conditions.
Emergency Vehicles shall have access thru work zone & Bicyclists shall share the roadway. Warning Lights shall be used for nighttime per MUTCD

Alert Traffic Control, Inc.
543 Sower Dr
Bayfield, CO 81122
Prepared By:Trudy Coons
Office: 970-884-0578
Fax: 970-884-0590
tcoons@alertraffic.com
Date Prepared: 9/28/16
Signature:

Reviewed and Accepted:

Contractor

www.invarion.com

SMPA MHT #7
Road Narrow
Ilium Rd.
Existing Speed 35 MPH
Scope of Work: Underground
Power Lines.

Permit #_____

Expiration_____

Non-crashworthy items shall be stored outside clear zone No work allowed on legal holidays, or during periods of adverse weather conditions.
Emergency Vehicles shall have access thru work zone & Bicyclists shall share the roadway. Warning Lights shall be used for nighttime per MUTCD

MHT may be used in conjunction will all other MHT's on this project.
MHT may be used in either direction

CROSSING LIVE LANES OF TRAFFIC SHALL BE PROHIBITED BY ALL JOB SITE EMPLOYEES UNLESS THE PROPER TRAFFIC CONTROL IS PROVIDED BY THE TRAFFIC CONTROL SUPERVISOR ON SITE. ALL WORK SHALL BE DONE IN ACCORDANCE TO THE MUTCD. FINAL WILL DEPEND ON SITE AND SAFETY.

Alert Traffic Control, Inc.
543 Sower Dr
Bayfield, CO 81122
Prepared By:Trudy Coons
Office: 970-884-0578
Fax: 970-884-0590
tcoons@alertraffic.com
Date Prepared: 9/9/16
Signature:

Trudy Coons

County Reviewed and Accepted:

Contractor

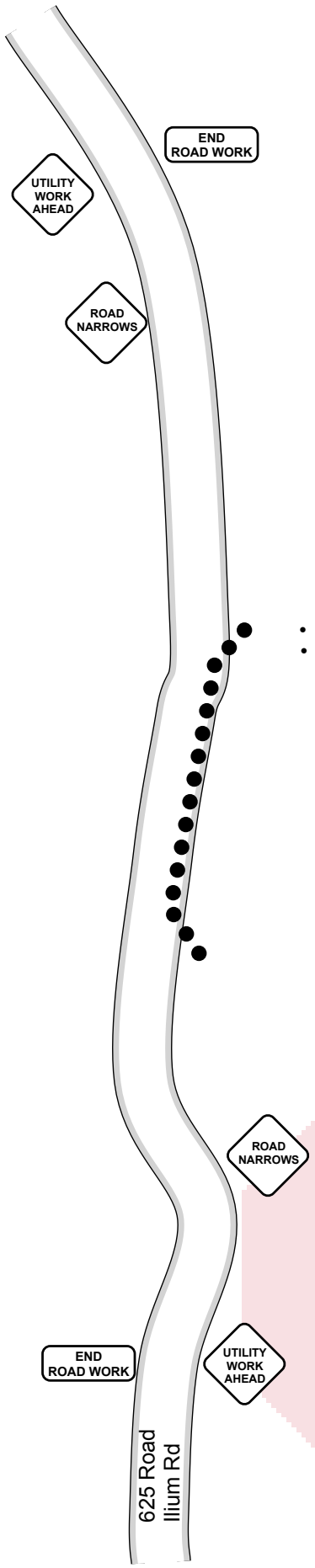

Not To Scale

Tabulation
2 x end road work G20-2a
2 x utility work ahead W21-7
2 x road narrows W5-1
Drums as Needed
Lights for Drums

Taper 33'
Taper Spacing 10'
Tangent Spacing 20'
Sign Spacing 500'

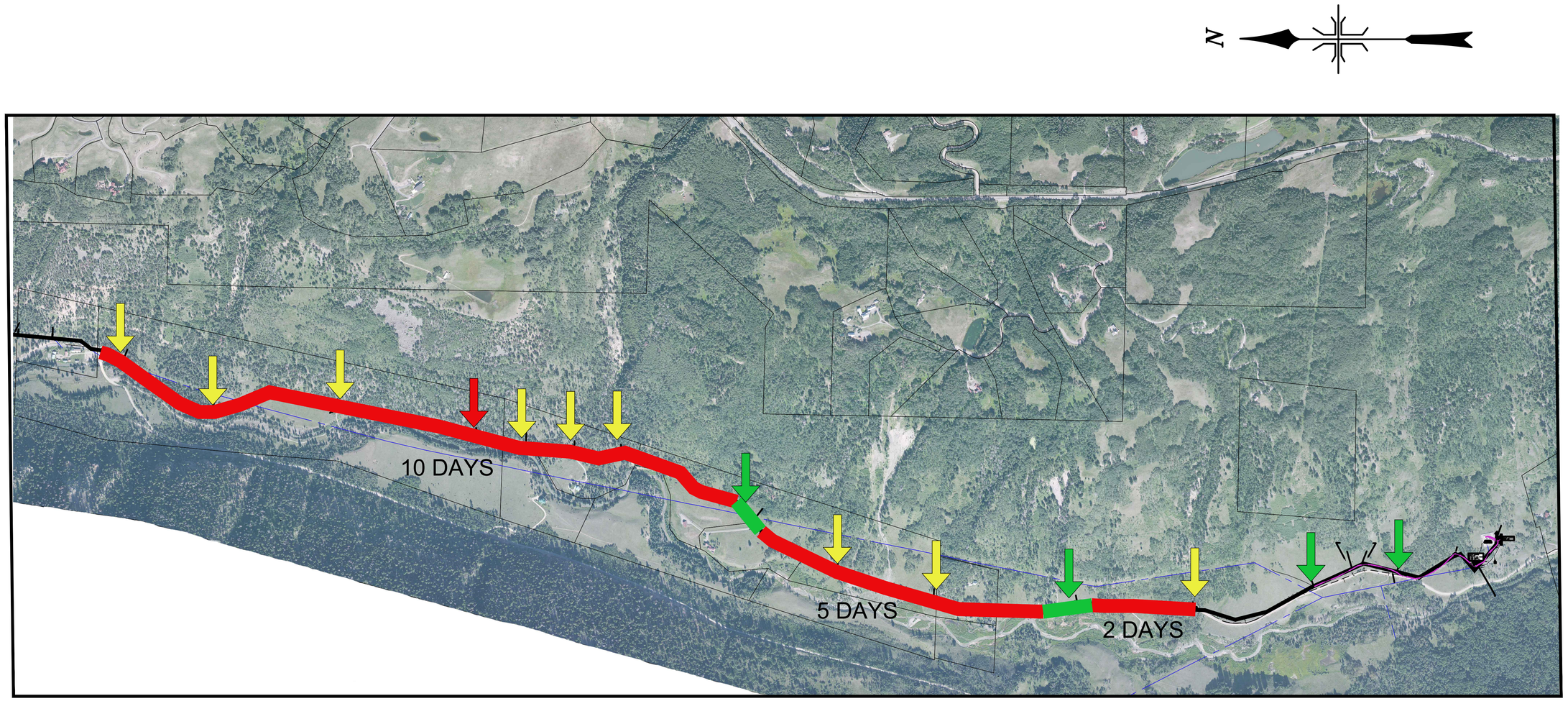

EXCAVATION ACTIVITES

- ROAD/TRAIL CLOSURE
- LANE CLOSURE
- SHOULD CLOSURE

CABLE PULLING ACTIVITIES AT EQUIPMENT LOCATIONS

- ROAD/TRAIL CLOSURE
- LANE CLOSURE
- SHOULDER CLOSURE

TELLURIDE RELIABILITY PROJECT
SAN MIGUEL POWER ASSOCIATION
TRAFFIC CONTROL PLAN

No	Revisions	Date	By
A	ISSUE FOR AGENCY REVIEW	10-06-16	DHR

SAN MIGUEL POWER ASSOCIATION
TELLURIDE RELIABILITY PROJECT
UNDERGROUND DISTRIBUTION LINE
TRAFFIC CONTROL PLAN

Exponential Engineering Company
202 W. North Street
Cortez, Colorado 81321
Phone: (970) 564-9261
Fax: (970) 564-1420

Drawn	NRB
Designed	DHR
Checked	DHR
Approved	DHR
Scale:	
11x17	NONE
22x34	NONE
Date	10-06-16
Proj. No.	SMPA-1401
Reference	

Sheet No.
TRAF-1

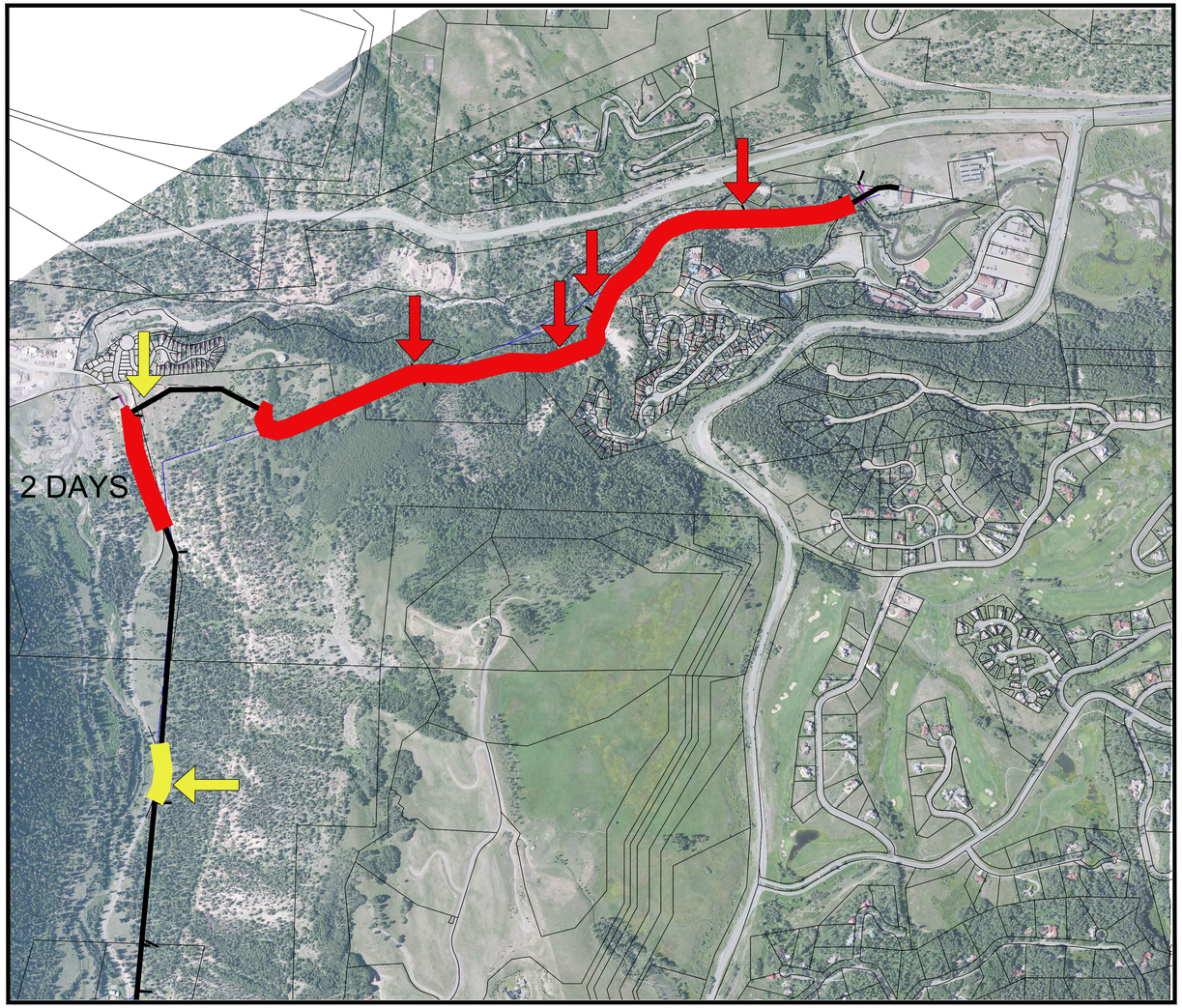

N

EXCAVATION ACTIVITES

- ROAD/TRAIL CLOSURE
- LANE CLOSURE
- SHOULD CLOSURE

CABLE PULLING ACTIVITIES AT EQUIPMENT LOCATIONS

- ROAD/TRAIL CLOSURE
- LANE CLOSURE
- SHOULDER CLOSURE

TELLURIDE RELIABILITY PROJECT
SAN MIGUEL POWER ASSOCIATION
TRAFFIC CONTROL PLAN

No	Revisions	Date	By
A	ISSUE FOR AGENCY REVIEW	10-07-16	DHR

SAN MIGUEL POWER ASSOCIATION
TELLURIDE RELIABILITY PROJECT
UNDERGROUND DISTRIBUTION LINE
TRAFFIC CONTROL PLAN

Exponential Engineering Company
202 W. North Street
Cortez, Colorado 81321
Phone: (970) 564-9261
Fax: (970) 564-1420

Drawn	NRB
Designed	DHR
Checked	DHR
Approved	DHR
Scale:	
11x17	NONE
22x34	NONE
Date	10-06-16
Proj. No.	SMPA-1401
Reference	

Sheet No.
TRAF-2

1 SCHEDULE OF PLANNED CONSTRUCTION ACTIVITIES

Con□tr□□□t□on o□the 24.9□□ d□tr□□□□t□on □o□erl□ne l□ne □ro□ the S□n□h□ne S□□□tat□on to the □ell□r□de S□□□tat□on □□ant□□□ated to □e□n □n □□r□ 2017 and □e □o□□leted □□ end o□ □□to□er 2017. □he □n-□er□□□e date □or the entr□e □ro□e□t □□ □□hed□led □or □ □to□er 31, 2017. San M□□□el Po□er □□□o□□at□on, □n□. (SMP□) ex□e□t□ to a□ard the □on□tr□□t□on □ontra□t to a □eneral □ontra□tor □n □an□ar□ o□2017. □he □eneral □ontra□tor □□ll e□ta□l□h a □on□tr□□t□on □□hed□le to □on□or□ to the □lanned date□ here□n. □he □ontra□tor □a□ad□□□t the t□□□n□ o□the □ro□e□t a□t□□te□ a□ needed to a□□o□ □odate an□ □er□□t □t□□□lat□on□, □eather dela□□ and □ater□al dela□□. Pro□e□ted □a□or □□hed□le □ le□tone□ □n□l□de:

April – June 2017

- □n□tallat□on o□d□tr□□□t□on □o□erl□ne and □□er o□t□□ d□□t □an□alon□ □l□□□ □oad and □allo□n□ □oo□e □ra□. □h□□ □ha□e □□ll al□o □n□l□de all ne□e□ar□ □n□tallat□on o□□ond□t□ □or □□□to□er□ □er□ed alon□ □l□□□ □oad.
- □n□tallat□on o□d□tr□□□t□on □o□erl□ne □a□lt□, □o□erl□ne □e□t□onal□z□n□ □a□net□ and □□er o□t□□ □a□le □a□lt□.
- □n□tallat□on o□□□□t□h□n□ and □e□t□onal□z□n□ □a□net□ ad□a□ent to the S□n□h□ne S□□□tat□on a□ □ell a□ □□er o□t□□ □a□lt □n□tallat□on near the S□n□h□ne S□□□tat□on □ontrol ho□□e.
- □n□tallat□on o□d□tr□□□t□on □o□er □a□lt and □□er o□t□□ □a□lt ad□a□ent to the □ell□r□de S□□□tat□on.

June – September 2017

- □e□t and re□a□r ex□t□n□ □ond□t□ □et□een the S□n□h□ne S□□□tat□on and Stat□on 24□00
- □n□tallat□on and ter□ □nat□on o□24.9□□ d□tr□□□t□on □a□le□alon□ ent□re ro□te □ro□ S□n□h□ne S□□□tat□on to □ell□r□de S□□□tat□on.
- □n□tallat□on o□□□er o□t□□ □a□le alon□ ent□re ro□te □ro□ S□n□h□ne S□□□tat□on to □ell□r□de S□□□tat□on.
- Po□erl□ne tren□h re□la□ at□on and re□e□etat□on to □n□l□de □ra□el and a□□halt re□a□r alon□ □l□□□ □oad.

August – October 2017

- □□tr□□□t□on □o□erl□ne □a□le and □□er o□t□□ □a□le te□t□n□.
- □n□tallat□on o□□□n□le □ha□e □o□er □a□le□a□ □ell a□re-□or□n□ ex□□t□n□ ele□tr□□ □er□□e□ to □re□are □or tran□er o□re□dent□al □er□□e□alon□ □l□□□ □oad □ro□ the o□erhead d□tr□□□t□on l□ne to the ne□ □nder□ro□nd □□□te□.
- □n□tallat□on o□□hort □ond□t and d□tr□□□t□on □a□le□ □□th□n the S□n□h□ne and □ell□r□de S□□□tat□on □en□e□.
- □n□tallat□on o□ne□ □a□le □nter□onne□t□on □□th□n the S□n□h□ne and □ell□r□de □□□□tat□on □en□e□.
- □n□tallat□on o□□nal □□er o□t□□ □a□le□ ro□ □a□lt lo□at□on□o□t□de o□the □□□□tat□on□ to ter□ □nat□on □o□nt□ □n□de □oth □□□□tat□on □ontrol □□ld□n□□.
- □ner□zat□on and te□t□n□ o□ne□ d□tr□□□t□on □o□er □□□te□ and □□er o□t□□ □a□le □□□te□.
- F□nal □ro□e□t re-□e□etat□on and ro□te re□tora□t□on.

Con□tr□□□t□on a□t□□te□ □□ll □e Monda□□ Fr□da□ 6:00 □M to 6:00 PM. Con□tr□□□t□on □□ll not o□□□r on the □a□or □e□t□al □ee□end□. □e□er to □ell□r□de □e□t□al □□hed□le.
□n□e SMP□ ha□a□arded the □ro□e□t to the □□al□□ed □□dder SMP□ □□ll □ro□de San M□□□el Co□nt□ (SMC□) □th an □□dated □on□tr□□t□on □□hed□le. SMP□□□ □ro□e□t □ana□er □□ll □n□or□ SMC□□□ □ro□e□t re□re□entat□□e o□an□ □□hed□le □han□e□.

2 EQUIPMENT AND MATERIALS TO BE USED

□he □ollo□□n□ l□□t□ de□□r□□e the e□□□□□ ent and □ ater□al□ ant□□□ated □or the □ro□e□t.

Table 2-8 Anticipated Construction Workforce and Equipment

Underground Duct Bank Construction		
Activities	**Crew Size**	**Equipment**
□ran□□ort o□□ en and tool□	N□	□□□□□ tr□□□□
Clear□n□ and r□□ht o□□a□ □re□arat□on	2 to 6 □eo□le	1 □o□□at 1 dozer
□oad re□torat□on	2 to 4 □eo□le	1 road □rader
□ □□t a□ate□ ent	1 to 2 □eo□le	1 □ater tr□□□
□ren□h ex□a□at□on and □a□□□ll□n□	2 x 6-□er□on □re□ □	1 □a□□hoe 1 tra□□hoe□ex□a□ator 1 tren□her 1 □o□□at 1 □□ldozer
□e□etat□on□□□o□l□ re□ o□al	2 to 6 □eo□le	1 d□□ □ tr□□□ 1 □ront end loader
□□r□ed □t□l□t□lo□at□n□	1 to 2 □eo□le	1 □othol□n□ tr□□□
Mater□al del□□er□[SB1]	2 to 4 □eo□le	1 □ ater□al □an□tr□□□ 1 □lat□ed tr□□□
Mater□al □nload□n□ and □o□t□on□n□	2 to 4 □eo□le	1 □rane (24-30 ton) 1-2 □or□l□t
Con□rete del□□er□ and □la□e□ ent	2 to 8 □eo□le	1 □on□rete tr□□□ 1 □on□rete □□□ □er (□□e□al □la□e□ ent)
□a□□□ll □o□ □a□t□on	2 to 4 □eo□le	1 □o□ □a□tor 1 □hee□□□oot □o□ □a□tor
Mo□l□zat□on□de□ o□□l-□zat□on	4 to 6 □eo□le	1 tra□tor tr□□□ 1 lo□□o□tra□□er 1 □a□□hoe tra□□er

Table 2-8 Anticipated Construction Workforce and Equipment (continued)

Underground Cable Installation		
Activities	**Crew Size**	**Equipment**
□ran□□ort o□□ en and tool□	N□	1 □□□□□□ tr□□□
Mater□al del□□er□	2 to 6 □eo□le	1 □ater□al □an□tr□□□ 1 □lat□ed tr□□□
□□□□□ ent and □ater□al del□□er□	2 to 6 □eo□le	1 tra□tor tr□□□ 1 lo□□o□tra□ler
Mater□al □nload□n□ and □o□t□on□n□	2 to 6 □eo□le	1 □or□□t 1 □rane (24-30 ton) 1 □a□□hoe
Ca□le □□ll□n□	6 to 8 □eo□le	1 reel tra□ler 1 □a□le □□ller
24.9□□ □a□le ter□ □nat□on□and □□n□t□on □a□net□	2 to 6 □eo□le	1 reel tra□ler 1 □a□le □□ller

3 METHOD OF INSTALLATION

UNDERGROUND DISTRIBUTION LINE CONSTRUCTION

□he □nder□ro□nd □on□tr□□t□on □□ll □n□ol□e □□e o□the □a□ort□ o□the r□□ht-o□-□a□ (□□W) □or the ent□re len□th o□the □r o□e□t. □he □□W □□ll □ro□de a□□e□□ □or □eh□□le□, e□□□□□ent and □re□□ a□ □or□ □ro□re□□e□ □ro□ one □a□lt or □anhole □te to the next. □n□e the □□W ha□ □een □raded or □r□□□ed, □□ a n d a□ needed to e□ta□□h a□□e□□ do□n the □□W, tren□h□n□, □ond□□t, d□□t □an□, □a□lt, and □a□le □□ll□n□ □re□□□□ll □e□n □or□. □he□e a□t□□te□are de□□r□□ed □n the □ollo□□n□ □e□t□on□.

- **Trenching**

□n □eneral, three □ethod□ □□ll □e □t□□zed d□r□n□ □nder□ro□nd □on□tr□□t□on to en□□re that to□□o□ □□ □al□a□ed and □rote□ted □or □□e d□r□n□ □lean-□□ and re□tora□□on. □he□e □ethod□ are □ho□n □n F□□□re 3-10, □h□□h de□□□t□ to□□o□ and □□o□ □tora□e □on□□□□ra□□on□ on the □□W. □ren□h□n□ □eneral□ re□□□re□ a □or□n□ □de and a □□o□ □de□ho□e□er, □lo□e□ and other □te □on□tra□nt□ □o□et□□e□ re□□□re □od□□ed □ethod□ o□tren□h ad□an□e□ent. □o□□o□ □□ll □e □e□t □e□arate □ro□ □□□□o□ (□□o□) □nt□ □t □□ needed d□r□n□ □lean □□ and re□tora□□on. □□ to□□o□ and □□□□o□ □le□ are d□□□□□lt to d□□t□n□□□h (□.e., □here the □ and □ or C □o□ hor□zon□ are a □□□lar □olor), to□□o□ □le□ □□ll □e la□eled □□th □□n□ or la□□n□ □nt□ the to□□o□ □□ ret□rned to □t□or□□□nal lo□a□□on. □he to□ □o□□n□ □ □ethod□ are de□□r□□ed □elo□.

□ **Trenchline Only Method** □ □he tren□h□ne onl□ to□□o□ □al□a□e □ethod □□ll □e □□ed □or tren□h□n□ a□ro□□ □etland□ □here □rad□n□ □□ not re□□□red, and □here no ex□e□□□□e □□o□ □□ ant□□□□ated. □he to□ 4 to 6 □n□he□ (12 □n□he□ □n □etland□) o□to□□o□ □□ll □e re□o□ed □ro□ the tren□h□ne and □□ndro□ed alon□ the tren□h, t□□□all□on the tren□h and □□o□ (□□□□o□) □de o□ the □□W. □ren□h □□o□ □□ll □e □la□ed ad□a□ent to the to□□o□ on the □a□e □de o□the tren□h. □□r□n□ □a□□□ll, the □□o□ □□ll □e □are□□ll□rolled □a□□ □nto the tren□h,. □he tren□h □□ll then □e □o□ □a□ted to red□□e □□□□den□e. □a□t□, the to□□o□ □□ll □e □la□ed □a□□ o□er the tren□h□ne and □onto□red to □at□h the or□□nal □rade. See to□ □ll□□tra□on on F□□□re 3-10. □x□e□□ □□o□□ □□ll □e re□o□ed □ro□ the □ro□e□t □te.

- **Trench and Spoil Method** □ □he tren□h and □□o□ □ethod □□ll □e □□ed □here □rad□n□ □□ not re□□□red and □here no ex□e□□□e □□o□ □□ ant□□□ated. □o□□o□ □□ll □e □al□a□ed □ro□ the tren□hl□ne and □□ndro□ed alon□ the ed□e o□the □□W. □he tren□h □□o□ □□ll then □e □la□ed alon□ the tren□h, □□□□o□ on to□ o□ to□□o□. □□r□□ □a□□□ll, the tren□h □□o□ □□ll □e □la□ed □n the tren□h, □ollo□ed □□ the to□□o□. □x□e□□ □□o□ □□ll not □e □□read o□t o□er the to□□o□ on the □or□n□ □□de o□the □□W or an□other area □here to□□o□ □□ re□ent. See □□ddle □ll□□trat□on on F□□□re 3-10. □x□e□□ □□o□ □□ll □e re□o□ed □ro□ the □ro□e□t □te.

- **Full ROW Method** □ Where □rad□n□ □□ re□□□red, □□□h a□ □□de □lo□e□ or □ne□en terra□, or □here □t □□ de□ra□le to □□read o□t ex□e□□ □□o□ a□ro□□ the □□W d□r□□ □lean-□□ and re□tora□t□on, □□ll □□W to□□o□ □al□a□e □□ll □e □er□or□ed. F□ll □□W to□□o□ □al□a□e □□□ol□e□ re□o□□□ the to□ □e□eral □□he□ o□to□□o□ and □□ndro□□□ □ alon□ the ed□e o□the □□W, □re□era□l□ on the h□□h □□de o□the □□W. □raded □ater□al and tren□h □□o□ (□□□□o□) □an then □e □la□ed on the □or□n□ □□de o□the tren□h and □□o□ □□de o□the □□W.
□r□□ □a□□□ll, tren□h □□o□ □□ll □e □la□ed □a□□ □n the tren□h and ex□e□□ □□o□ □an □e □□read a□ro□□ the □or□n□ □□de, □at□h□□ the or□□□nal □onto□r□ a□ □lo□e a□ □ra□t□□al. □a□tl□, the to□□o□ □□ll □e □□read a□ro□□ the □□W to □at□h the or□□□nal □rade. See □otto□ □ll□□trat□on on F□□□re 3-10. □x□e□□ □□o□ □□ll □e re□o□ed □ro□ the □ro□e□t □te.

□□r□□ □□W □re□arat□on, the □enterl□ne o□the d□□t □an□ □□ll □e □ar□ed □□th lath and □la□□□□ to □□de the tren□h□□ □re□ d□r□□ d□□□□□ o□erat□on□. Wheel d□t□her□, ex□a□ator□ or □a□□hoe□ □□ll □e □□ed to d□□ the tren□h a□□rox□□atel□2 □eet □□de □□5 1□2 □eet dee□. □ dee□er tren□h □a□ □e re□□□red at □trea□ □ro□□□□□, □tee□ □alle□□, ex□□t□□ □tor□ dra□□, ex□□t□□ □□□el□ne□, and ex□□t□□ tele□hone l□ne□. □o□□o□ that □a□ □re□o□□□ □to□□□□led d□r□□ □rad□□ □□ll □e □rote□ted d□r□□ tren□h□□ to en□□re that tren□h □□o□ (□□□□o□) doe□ not □et □xed □□th to□□o□. □o□□o□ and □□o□ □le□ □□ll □e □e□t d□□t□□t□l □e□arate a□ □ho□n □□ F□□□re 3-10. □x□e□□ to□□o□ □□ll □e re□o□ed □ro□ the □te and d□□□o□ed o□□ro□erl□. □□□ □ tr□□□□ □□ll □e □□ed to ha□l o□□□□o□ a□ needed. □□ to 20-30 d□□ □ tr□□□ tr□□□a da□□□ll □e □or ha□l□□ ex□e□□ □□o□ d□r□□ the □ea□t□□e□o□d□□t □an□ □□tallat□on.

□□ to 1,500 □eet o□tren□h □a□ □e le□t o□en at an□ one t□□e. □□ □eneral, □ond□t □□tallat□on and □o□r□□ □on□rete □l□r□r □□ the d□□t □an□ □□ll o□□□r a□ □lo□e to tren□h□□ ex□a□a□t□on a□ □o□□□le, ho□e□er, the tren□h □a□re□a□ o□en □or □□ to 10 da□□a□ □on□tr□□t□on □ro□re□□e□.

□□ □□land area□, the tren□h □□ll □e d□□ and the ex□a□ated □ater□al □□ll □e □la□ed next to the tren□h. □□n □lo□e□ that lead to □etland□ or □ater □od□e□, tren□h □l□□□ □□ll □e le□t □□ □la□e at the ed□e o□the □etland or □an□ (or □□rther □a□□) to □□olate the □etland or □ater □od□ □□nt□□ the t□□e o□the □ro□□□□. □ren□h □□o□ □□ll □e □la□ed □eh□nd a □ed□□ent □arr□er at lea□t 10 □eet □ro□ the ed□e o□ □etland or □ater □od□.

□□en tren□h that □annot □e □a□□□lled □□ the end o□the □or□ da□ □□ll □e □lo□ed or ra□□ed at e□ther end to allo□ tra□□ed □□dl□e to e□a□e □ro□ the tren□h. Need to □tate ho□ the □□□l□□ □□ll □e □e□t □a□e d□r□□ t□□e o□o□en tren□h. □.e. oran□e □en□□□.

- **Conduit and Duct Bank Installation**

□□ the tren□h □□ □en□ ex□a□ated, a □ond□t □re□ □□ll □e□□n al□□□n□ □ond□t holder□ alon□ the □otto□ o□the tren□h and a□□x□□ the □ond□t □□ the de□□□ned □attern. □on□ □ell □ S□□□ot t□□e P□C □ond□t or □ond□t □□th lon□ l□ne □o□□□n□□, t□□□all□□ □n 10-□oot to 20-□oot len□th□, □□ll □e □□ed.

Ce□ent tr□□□□ □□ll □e □□ed to □o□r □on□rete □l□r□r □ aro□nd the d□□t □an□ on□e eno□□h □ond□t ha□ □een □□talled to □□t□□ □o□□□□□□ the tr□□□□ to the □□W. Cre□□ □□ll □□□de the tr□□□□ alon□ the □or□n□ □□de o□the □□W and d□re□t the □on□rete □nto the tren□h. □□ area□ too □tee□ to a□□e□□ □□th □e□ent tr□□□□ a □rane □□th a ho□□er □□ll □e □□ed or the □on□rete □□ll □e □□rr□ed □□□□ hea□□ □on□tr□□t□on e□□□□□ent (e.□. □o□le □rane, tra□□hoe, □a□□hoe, □□□ □□□ tr□□□□ trailer) a□□xed □□th a ho□□er. S□□□lar te□hn□□□e□ □a□ □e □□ed □□ □e□al □□t□at□on□ □□□h a□ □etland area□. □a□h □e□ent

tr□□□ □□ ant□□□ated to □a□□□ll a□□rox□□atel□ 30-35 □eet o□o□en tren□h and □□ to 20-30 □e□ent tr□□□ tr□□□a da□ □□ll □e □□ed d□r□n□ the □ea□t□□e□o□d□□t □an□ □n□tallat□on.

□n order to □re□ent □on□rete □ro□ harden□n□ □n□de o□the □on□rete tr□□□, □on□rete □a□ho□t □a□□e re□□□red □r□or to □on□rete tr□□□ dr□□er□ lea□n□ the □or□ area. Ce□ent □a□ho□t □ll o□□□r □th□n the dr□o□en tren□h ahead o□the □ond□t□n□tallat□on □hen □ea□□le. □□t□□ not □o□□□le to □ond□□t □e□ent □a□ho□t □th□n the tren□h, □e□ent □a□ho□t □tat□on□ □ll □e □on□tr□□ted □th an earthen □er□ l□ned □th □la□t□□or e□□□□alent de□□□n that ade□□atel□ □onta□n□ the □a□ho□t. □□r□n□ □er□od□o□n□le□ent □eather, □a□ho□t □tat□on□ □hall □e □o□ered □th □la□t□□ to □re□ent □onta□t □th ra□n□ater. □n□e the □a□ho□t ha□ hardened, t□ □hall □e re□o□ed □ro□ the □□W and ha□led to an a□□ro□ed o□□-□te d□□□o□al □a□lt□. □n no □a□e □ll □e□ent □a□ho□t □e allo□ed □th□n 100 □eet o□a □trea□ or □etland or □tho□t □ro□er □onta□n□ent. □□□on□rete □a□ho□t □□ to o□□□r □th□n an o□en tren□h, the tren□h □ □□t □e □lo□ed a□a□□ro□ the □on□rete laden □ater □ro□ enter□n□ the re□o□r□e.

□he □on□rete □n the d□□t □an□ □ll □e allo□ed to harden □or a□□rox□□atel□ 1 da□, then nat□□e □a□□ll (□□□□ol) □ll □e □la□ed o□er the tren□h and □o□ □a□ted to □□□t □elo□ □rade. □o□□ol □o□ld □e □□ed to dre□□ the □□□er ro□□hl□ 6 □n□he□, □□ □o□□□le, o□ the tren□h □□r□a□e to □ro□ote re□e□etat□on. □□er□e□ort □ll □e □ade to a□o□d □x□n□ to□□ol□and □□□□ol□d□r□n□ □a□□□ll.

- **Vaults**

□a□lt □n□tallat□on □ll □e□n □□ ex□a□at□n□ a □t □ea□□r□n□ a□□rox□□atel□ 12 □eet lon□, 6 □eet □□de, and 7 □eet dee□. S□o□l □enerated □ro□ the ex□a□at□on □ll □e te□ □orar□l□ □tored □th□n the □□W l□□t□ □n an area □re□o□□l□ □tr□□□ed o□to□□ol□. □x□e□□ □□ol □ll □e ha□led o□□□te and d□□□o□ed. □n□e the ex□a□at□on □□ □o□□□lete, t h e □a□lt hole □ □l □e □□lled □ □t h □□ to 1 2 □ o □ □r a □e l □r □o r □o □n □t a l l □n □ t h e □a □l t. □h e, □re□a□r□□ated □on□rete □a□lt □ll □e tran□□orted to the □□W and □et □nto the ex□a□ated □t□ Ca□t □ron □anhole □ra□e□ and l□d□ □ll □e □n□talled □□n□ □re-□a□t □anhole r□□er□ and the to□ 1 to 3 □eet □ll □e □a□□□lled and □o□ □a□ted □th nat□□e □ater□al.

- **Cable Pulling**

□□ter a□ □e□□ent o□d□□t □an□ and □a□lt□ ha□e □een □n□talled, the d□□t □an□ □ond□t□ □ll □e □leaned, a □□ll□n□ l□ne □la□ed □th□n ea□h □ond□t and the □a□le□ □□lled thro□□h the d□□t □an□ □ond□t□ and ter□ □nated at ea□h o□the □a□lt□ alon□ the ro□te. P□ll□n□ a□□□□te□ re□□□re a □a□le reel □e □la□ed at one □a□lt and a □□ll□n□ r□□ □la□ed at another. □he len□th o□the □□ll and the lo□at□on o□□a□lt□ □□ed to □ond□□t □□ll□n□ a□□□□te□ are de□endent on the terra□n and the len□th o□□a□le a□a□la□le on a □□ool. □he l□n□ □n the d□□t □□ atta□hed to the □a□le □□ll□n□ e□e□ to □□ll the □a□le thro□□h the d□□tand a l□□r□ant □□ a□□□ed to the □a□le a□□ enter□ the d□□t to de□rea□e □□□□on d□r□n□ □□ll□n□. □he □□er o□□□ a□le □ll □e □□lled thro□□h the 1.5□□ond□□□n a □□□lar □anneror □ll □e □lo□n □nto the d□□t □□n□ □o□ □re□□ed a□.

□ □e r □□□e t r □□□ □ll □e □o□□□oned ad□a□ent to the □anhole o□en□□ to □a□□□tate □a□le □□l□□□n□ter□ □nat□on at the □a□lt□ a□ter the □a□le□ are □□lled thro□□h the d□□t□. □ □o□le □o□er □enerator □ll □e lo□ated □eh□nd the tra□□er to □ro□de □o□er, □□□needed. □er□ □nat□n□ □or□ □ll □e □o□ □leted □□ ded□□ated □re□□ and t□□□all□ta□e□ 1 to 2 da□□ to □o□ □lete at ea□h □a□lt. □a□h □a□le □e□□ent □ll □e □□lled □nto the d□□t □an□ and □□t at ea□h □□n□□on □ox. □a□h □a□le □ll then □e ter□ □nated □th an el□o□ ter□ □nat□on □nd the el□o□ ter□ □nat□on□ □ll then □e □onne□ted to □o□er □eed thro□□h □ar□ □□th □□□h□n□ □n□ert□ □n□talled □n□de the □□n□□on □oxe□.

- **Vaults/Junction Boxes**

S□□□□□r□a□e □a□lt□ □th a□o□e-□ro□nd □□n□□on □oxe□ are re□□□red alon□ the □orr□dor □or □a□n□ □r□□ar□ □olta□e □onne□□on□, □a□le ter□ □nat□n□, and □or □ro□nd□n□ o□ the □□□te□ ne□tral □ond□□tor. □□o□e-□rade □□n□□on □oxe□ □ll □e a□□rox□□atel□ 7 □eet □□de, 2 □eet dee□ and 3 □eet tall. □he □□□□□r□a□e □a□lt (□alled a □ro□nd □lee□e) □□ □□er□la□□ and □□□et to □at□h the □rade at the □ox

lo□at□on. □he □ond□t□ are ro□ted to extend □nto the □ro□nd □lee□e□and the □□n□t□on □oxe□ are □n□talled on to□ o□the □ro□nd □lee□e. □□o □ro□nd rod□are dr□□en □th□n ea□h □ro□nd □lee□e. □ □ro□nd□n□ □□□te□ o□□o□□er □a□le□ □ll □e n□talled □th□n the □a□lt□□n□t□on □ox a□□e□ □l□that □onne□t□ the □ro□nd □lee□e, □□n□t□on □ox, and □□□te□ ne□tral to the □ro□nd rod. □he □□□te□ ne□tral □□ n□l□ded □n a □on□entr□□r□n□ □□th□n ea□h □o□er □a□le. □he □a□□et o□ea□h □a□le at ea□h ter□ □nat□on□ □□ □tr□□□ed □a□□ to ex□o□e the □□□te□ ne□tral. □ll □a□le ne□tral□ are then □onded to□ether and □onne□ted to the □ro□nd rod □□n□ □o□□er □a□le□.

Figure 3-10: Topsoil Salvage Methods – 115kV and 24.9kV Underground Cable

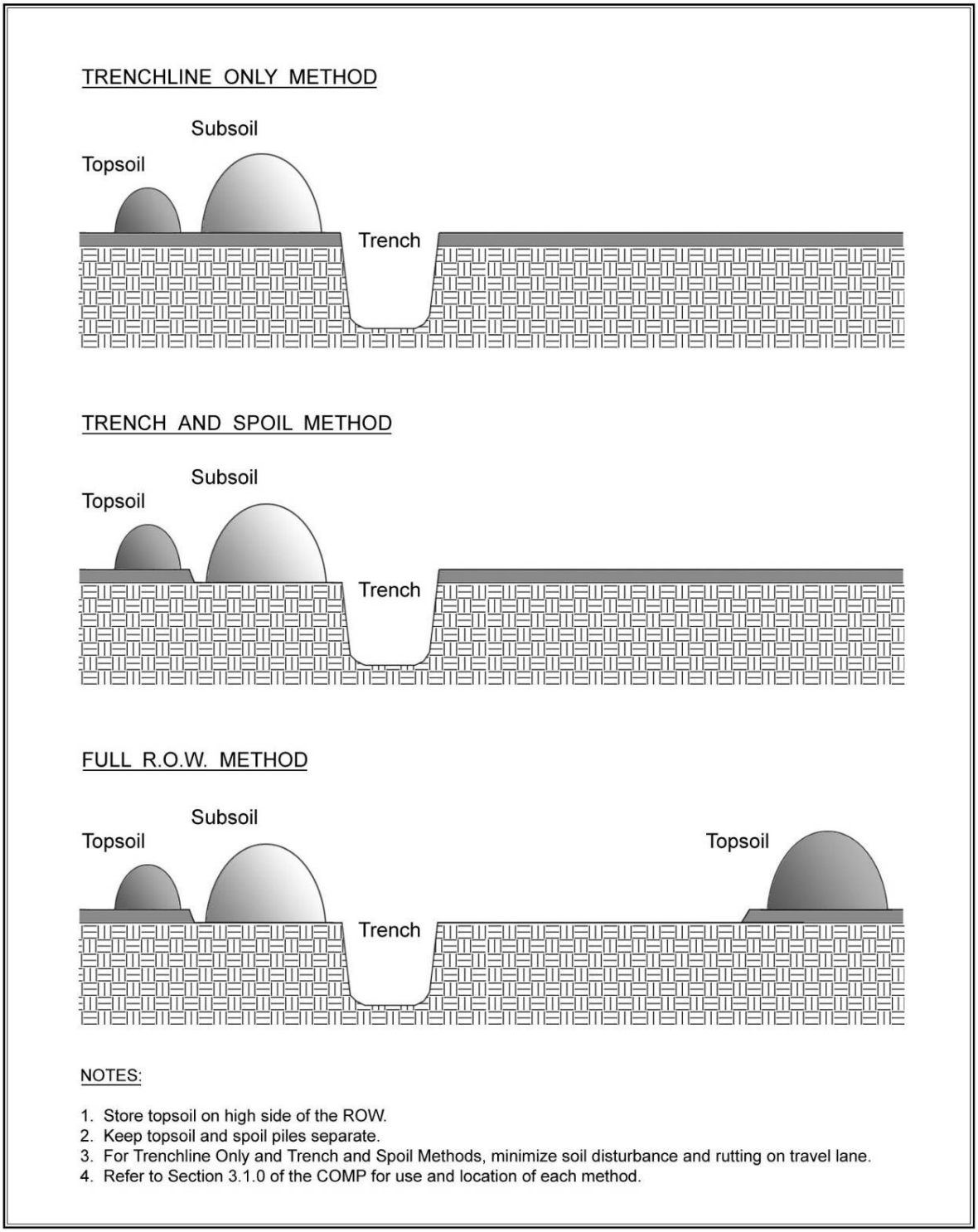

- **RESTORATION AND SEEDING**

Final clean-up and restoration activities will begin once salt, construction boxes, cables, and the duct bank have been installed and no further construction-related work is anticipated. All areas disturbed by construction that will not be used or maintained during the operation phase of the project will be returned to pre-construction conditions and seeded.

- **Clean-Up**

Trash receptacles shall be provided as needed, and upon completion of construction in a given section of the line the contractor shall remove all construction debris and material, including excess conduit and cable, wire scraps, old signs, old rags, and other trash from the ROW and dispose of it at a licensed site or recycling facility. Trash collected generated during clearing operations will also be removed from the ROW and disposed of at a licensed facility, unless requested by the landowner or land management agency. In addition, the contractor will repair and restore driveways, roads, trails, landscaping, or other features damaged during construction of the project.

In areas that were graded or where rutting resulted from vehicle and equipment travel the surface will be graded to match pre-construction conditions. Topsoil salvaged during construction will be re-spread to its original location. Feathering along the edges of a cut or filled area may be necessary to blend into non-disturbed areas.

In general, access roads will be left in place for use during the operation and maintenance of the constructed powerline. All areas requiring overland travel will be seeded for erosion control. Additional measures, including water bars and outlets will be installed during the clean-up phase as needed.

Severely compacted soil will be decompacted using an implement capable of relieving compaction without mixing soil horizons. Wheeled traffic has been limited to dry soil conditions, decompaction may not be needed. Areas with excessive sediment transport or rut-prone construction equipment traffic will likely experience a greater degree of compaction. The degree of compaction and whether surface or subsurface decompaction is required will be determined by SMP.

- **Restoration**

Once clean-up has been completed and all construction debris and material have been removed from work areas, disturbed areas will be prepared and reseeded.

- **Seeding**

All disturbed areas of the project will be seeded with an appropriate seed mix. Seed mixes on private land will be at the discretion of the individual landowner. All seed must comply with BLM, and Colorado seed seed guidelines. The seed will be stored in non-perishable bags.

SAN MIGUEL POWER ASSOCIATION, INC.
TELLURIDE/MOUNTAIN VILLAGE RELIABILITY PROJECT
CONTRACT TECHNICAL SPECIFICATION

Contents

General description and scope of the work 2
Scope of On-Site Work and Construction Facilities 5
Owner Furnished and Contractor Furnished Materials 7
Construction survey 9
24.9kV cable, cable accessories, and installation 10
Fiber optic cable and HDPE pipe installation 12
Duct Bank System 18
PVC Conduit 20
Concrete Slurry 22
Concrete Pre-Cast Vaults 26
Sectionalizing Cabinets 28
Grounding 29
Earthwork 30
Restoration of Driveways and Pavement 33
Revegetation 35

General description and scope of the work

PART 1 – GENERAL

1.01 SCOPE

A. This section provides a general description, scope of work and supplementary requirements for equipment, materials, and services included under these specifications.

B. The work shall include the furnishing and installation of a complete duct bank. This work shall include but is not limited to providing at a minimum: excavation, duct system installation, 24.9kV cable system installation, installation of all vaults and cabinets, termination of all 24.9kV cables, cable testing, fiber optic cable installation, select backfill placement, duct proofing, gravel and asphalt road repair, and re-vegetation. Contractor is to provide miscellaneous materials and services to complete the installations as specified herein and in accordance with these contract documents. The work scope includes all associated work items and materials required to perform the aforementioned major work items in a first class professional and energization ready manner.

1.02 PROJECT DESCRIPTION

A. The work under these specifications shall include furnishing and installing a complete 24.9kV cable and duct system per the drawings and specifications between the Sunshine and Telluride substations located near Telluride, Colorado.

PART 2 – PRODUCTS

2.01 MATERIALS

A. Major components of the work include installing the following Owner Furnished Materials:

1. <u>Owner Furnished Materials</u>
   a) 24.9kV cable (includes the 1000 mcm AL and the 500 mcm AL)
   b) 24.9 kV Cable Elbows
   c) 24.9 kV Arresters
   d) 24.9kV sectionalizing cabinets including feed-throughs and dust caps
   e) 24.9 kV vaults and fiber optic vaults

2. <u>Contractor Work and Contractor Furnished Materials</u>
   a. All conduit, conduit accessories, and adhesives
   b. Trench Excavation (all soil conditions)
   c. Concrete Slurry
   d. Removal and disposal of excess spoils
   e. Fiber Optic Cable Splices
   f. All required grounding
   g. Vault Racking

h. Field Conduit Proof Testing
i. Select Backfill
j. #12 AWG Copper Red Tracer Wire
k. Tracer Wire Test Stations

B. All material to be furnished by the Contractor must have written approval by SMPA. Materials must be submitted 60 days prior to installation for approval. Any material not accepted by SMPA must be re-considered and re-submitted for approval before installation, at Contractor's expense.

2.02 MISCELLANEOUS MATERIALS AND SERVICES

A. Miscellaneous materials and services not otherwise specifically defined shall be furnished by the Contractor in accordance with the following:

1. All nuts, bolts, gaskets, special fasteners, backing rings, tapes, glue and miscellaneous hardware required to assemble and interconnect components and equipment furnished under these specifications

2. Winch, rollers, sheaves, duct lubricant, pulling line, scaffolding, all associated tapes, and miscellaneous tools and materials necessary to the cable installation

3. Material Storage Facilities

5. Erection materials and services specified in these specifications

6. Testing to verify compaction of select backfill

PART 3 – EXECUTION

3.01 WORK INCLUDED UNDER THESE SPECIFICATIONS

A. The work under these specifications shall include installing all materials and services required to perform the scope of work in accordance with the specifications, the drawings, and other Contract Documents.

B. Additional components of the work are as follows:

1. Trench excavation backfill

2. Traffic control including trails

3. Safety training, as required by applicable local, state, federal agencies and SMPA

4. All project site preparation required for the project

5. All underground notifications (Call before you dig)

C. After cable installation, the 24.9kV cable system and fiber optic cable system will be tested by the Contractor, with SMPA present, to demonstrate its ability to operate under the conditions and fulfill the guarantees as set forth herein and in the contract. If the tests indicate that the cable installation fails to meet guaranteed performance, the Contractor shall make additional modifications and tests to ensure proper operation at no additional cost to the SMPA.

D. The Contractor shall perform all work in adherence with SMPA, San Miguel County, state, federal or other applicable safety requirements. The Contractor is completely responsible to determine all safety procedures.

3.02 CONTRACTOR’S PROJECT TEAM

A. Prior to commencement of work under this contract, the Contractor shall include an organizational chart for his project team showing the key team members, including position and project responsibilities, in his Proposal. The Contractor shall also include resumes of the key members in his Proposal. SMPA reserves the right to approve all project team members. Key project team members shall not be removed from the project without prior approval by SMPA and the Engineer.

3.03 CONTRACTOR'S DETAILED SCHEDULE

A. The time of completion of the work is of the essence. The Contractor shall submit a schedule which includes the completion of various activities in accordance with the milestone time periods and dates listed herein. In addition, it shall include delivery dates for materials and the completion of installation.

B. The Tentative Schedule and Plan for Construction for the installation of all items covered in this contract shall follow the complete installation and shall be coordinated with project milestones. The Tentative Schedule shall stipulate key milestone time periods and dates for the work included in this Contract. It is essential that the Contractor make every effort to complete the activities shown on or before the indicated dates to avoid delay of the entire project.

4. Procurement/Production/Shipping Schedule:
   a. Within 45 days of award of this contract, Contractor shall submit a detailed procurement/production/shipping schedule for the materials; thereafter, the schedule shall be updated as directed by SMPA, at a minimum of 30 days increments.

5. Installation/Testing Schedule:
   a. The Contractor shall submit the Contractor's Installation/Testing Schedule no later than the date indicated. Subsequent submittals of these documents shall be made in accordance with these specifications. The Contractor's schedule will be reviewed by SMPA for conflicts with SMPA’s overall Project Schedule.

3.09 COORDINATION

A. The Contractor shall cooperate fully with SMPA in maintaining orderly progress towards completion of the project as scheduled.

C. The Contractor shall keep himself and its subcontractors advised at all times during the course of construction regarding delivery status of SMPA furnished equipment and materials

D. SMPA will, upon written request by the Contractor, furnish information that may be available to SMPA regarding the status of SMPA furnished equipment and materials or construction work being performed under separate contracts.

3.10 CONFORMED TO CONSTRUCTION RECORDS

A. The Contractor shall be responsible for maintaining accurate construction records documenting the status of the construction process. These documents shall be available at all times to SMPA for review.

B. Contractor shall provide the final construction records to SMPA within two (2) weeks after construction completion.

3.11 CONSTRUCTION OBSERVATION

A. SMPA will provide construction observation personnel on site during construction to support the construction observation and monitoring process. The construction observation personnel will perform comprehensive monitoring to assure compliance with the specification requirements. This monitoring includes, but are not limited to, soil excavation and backfill, compaction testing, duct proofing, cable pulling and cable termination and testing. Observation does not release the Contractor from responsibility of any error or omission.

B. The Contractor will provide manpower and equipment as necessary to support this monitoring. The Contractor shall supply weekly schedule updates to the construction observation personnel in order to assist in planning the monitoring activities.

END OF SECTION

Scope of On-Site Work and Construction Facilities

PART 1 – GENERAL

1.01 GENERAL

A. This section covers the scope of the on-site field work to be performed, and the construction facilities and services to be provided by the Contractor and SMPA.

1.02 SCOPE

A. The Contractor shall furnish all materials, tools, equipment, vehicles, supplies, services, labor, and supervision required to perform the complete installation per the specification and drawings.

B. The civil work shall include excavation, and backfill, construction permits, and all other work required prior to cable installation, , cable duct bank, , vaults, handholes, tracer wire test stations, and sectionalizing cabinets.

C. The electrical work shall include installation of 260 mil EPR insulated 24.9 kV cables,; 24.9 kV two (2) point junctions, 24.9 kV four (4) point junctions, #6 AWG copper ground wire, and complete grounding system, and all necessary materials, equipment, terminate, neutral grounding, and system testing.

PART 2 – PRODUCTS

2.01 MISCELLANEOUS MATERIALS AND SERVICES

A. Miscellaneous materials and services not otherwise specifically called for to complete the 24.9 kV Underground Project shall be furnished by the Contractor:

1. Furnished by the Contractor:
   a. Field office and furnishings, supplies, communications services, clerical/administrative support, office equipment, and site and other transportation as may be required, all at Contractor's expense (The Contractor should note that the space available for such field office and equipment storage may be limited).
   c. Solvents and cleaning materials
   d. Other miscellaneous materials and services needed to complete the work
   e. All other accessories required for a complete 24.9 kV EPR cable system.

PART 2 – PRODUCTS

2.01 CONSTRUCTION PLANT AND TEMPORARY FACILITIES

A. The Contractor shall furnish all construction plant, temporary storage (including storage for Owner Furnished Materials) and marshalling yards, utilities, temporary facilities, equipment, materials and supplies required for completion of the installation work.

C. All temporary structures and facilities furnished by the Contractor shall remain the property of the Contractor and shall be maintained throughout the installation work. Any materials, equipment, or temporary structures installed or erected on project site by the Contractor shall be removed by the Contractor when so directed by the affected

landowner(s) and SMPA to permit the execution of other work in connection with the project and at the completion of the Contractor's work.

D. All Contractor-furnished construction plant and facilities shall be kept in good condition and shall be of the proper type and size to perform the work. The plant and facilities shall be regularly and systematically maintained throughout the work to ensure proper and efficient operation, which are inadequate or improperly maintained shall be promptly modified, repaired or removed from the project site and replaced as directed by SMPA, and shall be done so at the Contractor's expense.

E. When the installation work is completed, all Contractor-furnished temporary structures and facilities shall be removed from the project site and the area shall be restored to its original condition to the maximum extent practicable.

F. Temporary structures for offices and other uses for the Contractor or its subcontractors shall be provided by the Contractor unless otherwise specified herein. Suitable construction trailers shall be placed only in the locations negotiated by the Contractor with a third party.

2.02 CONSTRUCTION UTILITIES

A. Construction utilities required for the execution of the work shall be provided by the Contractor, at the Contractor’s sole expense.

END OF SECTION

Owner Furnished and Contractor Furnished Materials

PART 1 - GENERAL

1.01 SCOPE

A. The Contractor shall promptly receive, unload, and place into storage all owner furnished materials and supplies arriving at the project site for the work under this specification.

PART 3 - EXECUTION

3.01 GENERAL

A. Storage areas on the project site will be determined by the Contractor and approved by SMPA. Equipment and materials shall be stored in approved lay-down areas only.

B. Before unloading any owner furnished materials, the Contractor shall prepare and submit to SMPA for review a drawing indicating the proposed layout and utilization of his storage areas. Storage areas shall be utilized in accordance with the layout indicated on the drawings and as acceptable to SMPA. This drawing shall be kept current and shall indicate the location and description of all stored items for which the Contractor is responsible. Revised copies of this drawing shall be submitted to SMPA.

3.02 HAZARDOUS MATERIALS

A. As required under Federal Hazardous Communications Standards and certain state and local laws, the Contractor shall provide Material Safety Data Sheets covering all hazardous materials furnished under or otherwise associated with the work under this specification. The Contractor shall provide SMPA with either copies of the applicable Material Safety Data Sheets or copies of a document certifying that no Material Safety Data Sheets are required under any Federal, state or local law, regulation, statute or ordinance in effect at the job site.

B. Hazardous materials may use the terminology “toxic substances.” The Contractor is responsible for determining if any substance or material furnished, used, applied or stored under this Specification is within the provisions of any applicable statute.

C. The Contractor shall provide labeling of hazardous materials and training of employees in the safe usage of such materials as required under any applicable Federal, state or local law, regulation, statute or ordinance and applicable Contract Documents.

3.03 RECEIVING

A. At the time of delivery of owner furnished materials, and before unloading and taking delivery, the Contractor shall examine all delivered material and shall notify SMPA immediately of any shortages, discrepancies, or damage. Damaged materials shall not be used and shall, upon discovery, be removed from the project site and immediately replaced.

B. The Contractor shall prepare a listing of owner furnished materials received and acknowledge receipt of such items from SMPA. The Contractor shall take immediate custody of all materials and equipment received in good condition and shall thereafter be solely responsible for any damage or shortage until final acceptance of the Contractor’s work.

C. The Contractor shall be responsible for the prompt unloading of all owner furnished materials received into his custody and shall pay any demurrage.

D. The Contractor shall replace all owner furnished materials and equipment that are lost or damaged while in the custody of the Contractor. Replacement materials and equipment shall be of a type and quality equal to the original materials and equipment, shall be acceptable to SMPA, and shall be obtained expeditiously to prevent delay of the work. Extensions of time or extra compensation will not be granted for delays caused by failures to receive replacement materials and equipment at the time required for their installation.

E. The Contractor shall maintain a current, accurate inventory and record of location for all equipment and materials in his custody.

3.04 HANDLING

A. The Contractor shall handle all equipment and materials carefully to prevent damage or loss, shall store them in an orderly manner, shall keep adequate and convenient records of their location, and shall keep a continuously accurate inventory.

B. The Contractor shall re-handle and reload, if required, all Owner-furnished materials and equipment that have been rejected.

C. The Contractor shall handle and load all returnable packing boxes, special handling devices, and cable reels for SMPA-furnished materials and equipment and shall prepare shipping papers therefore, if required. All such materials shall be returned as promptly as possible.

3.05 STORAGE

A. Stored materials shall be adequately supported and protected to prevent damage.

B. Stored materials shall not be allowed to contact the ground, unless otherwise noted herein. In warehouses that do not have dry concrete or raised floors, materials and equipment shall be stored on platforms or shoring.

C. All openings and piping not stored under weatherproof covers shall be closed to prevent entrance of dirt or moisture during storage.

END OF SECTION

Construction survey

PART 1 - GENERAL

1.01 SCOPE

A. The Owner will provide one set of construction stakes or flagging delineating the power line alignment, location of sectionalizing cabinets and vaults, start and stop of cultural sites and wetlands.

B. Stakes and marks set by SMPA or Engineer shall be carefully preserved by the Contractor. The Contractor shall be charged for the cost of replacing or restoring the stakes and marks that are destroyed or damaged by its operation. This charge will be deducted from any monies due or to become due to the Contractor under the Contract.

END OF SECTION

24.9kV cable, cable accessories, and installation

PART 2 PRODUCTS

2.01 CABLE REELS

A. SMPA will furnish pre-cut cable reels applying to each specific pull on the project.

2.02 CABLE ACCESSORIES

A. 600 amp cable elbow terminations will be furnished by SMPA.

PART 3 – EXECUTION

3.01 CABLE INSTALLATION

A. The Contractor shall only utilize equipment in the best mechanical condition, and that shall function with dependability. Apparatus of questionable reliability, in the opinion of SMPA, shall not be permitted for use on any phase of the cable work.

B. A suitable pulling lubricant, consistent with the cable manufacturer's recommendations, shall be used when pulling in cables. The Contractor shall ensure that the pulling lubricant is not injurious to the cable. After the cable has been pulled, the exposed cable shall be wiped clean of lubricant with a cloth. All cables not terminated immediately after pulling shall have their ends sealed.

C. During installation, care shall be taken so as not to exceed manufacturer's minimum bend radius for all cables. Tension on the cable during installation shall not exceed the manufacturer's specification for tensile loading. Pulling tension shall be continuously monitored during installation. Cable shall be pulled in a steady continuous manner. Cable shall be installed in continuous lengths without intermediate splices. Adequate communications must be established and maintained between the cable feeding location and the pulling equipment during all pulling operations. The cable installation personnel shall be experienced with specific knowledge of the cable manufacturer's recommended procedures, and as a minimum shall conduct their work to conform to the following:

1. The cable strength elements shall be properly attached to an adequately rated breakaway swivel.

2. Cable tensile limits and tension monitoring devices shall not exceed cable pull tension and bend limits.

3. All cable shall be constantly lubricated during the pulling procedures.

D. Low pulling speeds shall be used so that a rate of 90 feet per minute is not exceeded. The tensile and bending limitation for cables shall not be exceeded under any circumstances. Adequate diameter wheels, pulling sheaves, and cable guides shall be used to maintain the specified bending radius. Tension monitoring shall be accomplished using commercial dynamometers or load-cell instruments. All equipment shall be designed to prevent a preset pulling tension from being exceeded. The pulling tension set-point shall be determined by the cable manufacturer. If during the pulling operation excessive

tension is detected, operations shall cease and the construction manager shall be notified. All conduits shall have a lubricant applied at each conduit ingress location and during the pull operation.

E. Contractor shall arrange pulling equipment at each vault or cabinet so that the winch line exits the main duct in a straight line.

F. Cables shall be pulled slowly and steadily. Cable pull shall not be stopped once the pull is started unless it is absolutely necessary. Cable shall be trained into the conduit in a manner that will prevent its dragging on the edge of the conduit mouth. Cables shall not cross each other when cables are pulled in the conduit.

G. During construction, the Contractor shall not cut the cable under any circumstance, which deviates, from the approved cable-pulling plan without consulting SMPA.

H. The cable shall be installed only during weather conditions approved by SMPA. Prior to setting up equipment and material for any cable pull, the cable riser pits shall be thoroughly cleaned and shall be dry. These conditions shall be maintained in the vaults while any work with the cable is conducted therein.

I. The 24.9 kV cable shall be installed in such a manner that exposure of the cable to possible damage is minimized. Cable installation shall be scheduled so that no cable is left uncovered overnight. Rocks, debris, construction equipment or other foreign material shall not be allowed beside open trench during pulling, where they might inadvertently fall into the trench onto the cable.

3.03 FIELD PROOF TESTS

A. At the completion of the cable installation, including terminations, the Contractor shall furnish personnel and equipment and shall conduct field tests of the cable, and terminators. Cable testing shall include hi-pot testing of all 24.9kV cables. The Contractor shall submit a planned hi-pot testing protocol and shall not commence any cable testing until the cable testing protocol is approved by SMPA.

3.04 TERMINATION / ELBOW INSTALLATION

A. Owner furnished cable elbows shall be installed in accordance the manufacturer’s recommendations.

B. Elbows shall be installed only during clear and non-threatening weather, or the Contractor shall supply SMPA approved adequate shelter and conditions for termination work.

C. The Contractor shall utilize only personnel who, on the basis of experience (min. five (5) years with 24.9 kV or higher EPR insulated class cables), are qualified to install the terminations being provided. Carelessness in handling cable, performing any operation, or in handling any apparatus, material, tool, or device in their work will not be tolerated under any circumstances. Smoking will not be allowed during cable terminator and splice installation.

D. The Contractor shall afford SMPA every opportunity to have at least two (2) construction observation personnel observe all phases of cable terminating

3.05 CABLE PHASING CHECK

A. Prior to termination of each cable, each end of the cable will be verified and marked to show the phase designation indicated on the drawings for the duct bank conduit the cable is in.

END OF SECTION 22050

Fiber optic cable and HDPE pipe installation

PART 1– GENERAL

1.01 SCOPE

A. This section covers the installation of all-dielectric fiber optic cable in underground conduit and fiber optic pull boxes. SMPA shall furnish the fiber optic cable and the Contractor shall furnish and provide all other materials and equipment needed to provide a complete operable telecommunication system described in the plans. Extra cable, as shown on the drawings, is to be left coiled in the pull boxes at the end of each run. The Contractor shall install all-dielectric underground fiber optic cable in conduit and pull boxes. The Contractor shall install pull-tape in the spare 1.5” HDPE conduit.

B. Fiber optic cable shall be run continuously without splices, except for splice and slack storage points, as noted on the Contract Drawings or approved by SMPA. Splice storage points are designated in the drawings.

1.02 SUBMITTALS

A. All submittals shall be made under provisions as set forth in this specification.

1.03 CABLE INSTALLATION PLAN

A. Prior to installation, the Contractor shall develop a Plan proposing pull points or points or blowing in the fiber, directions, and equipment to be used during installation. Conduit lengths and bends shall be included in the Pulling Plan. The Plan shall be submitted to SMPA for approval prior to the start of installation.

1.04 REEL INSPECTION

A. Contractor shall be responsible to physically inspect the cable and reel for damage. Cable reel shall be tested using an Optical Time Domain Reflectometer (OTDR) and optical power meter and the attenuation shall not exceed the values shown on the factory test including all pigtail splices and termination required for the test procedure. Fiber cables with losses exceeding those specified shall not be installed. All fibers in a cable shall be tested. OTDR traces shall be recorded in both directions on each strand at 1310 and 1550 nanometers. These traces shall set forth the baseline performance for each segment of cable, and shall be utilized during acceptance testing to determine the quality and workmanship of the installed cable.

B. Fiber optic cable testing shall be tested at the following times as a minimum:

1. Upon arrival of all cable to the job site

2. Immediately prior to cable installation

3. Immediately after cable installation

4. Testing upon completion of any splicing and terminations

C. Before un-reeling, the outside of each cable reel shall be carefully inspected and protruding nails, fastenings, or other objects which might damage the cable shall be removed. A thorough visual inspection for flaws, breaks, or abrasions in the cable sheath shall be made as the cable leaves the reel, and the pulling speed shall be slow enough to permit this inspection. Damage to the sheath or the finish of the cable shall be reported to SMPA.

1.05 REFERENCE STANDARDS

A. The following publications form a part of this Specification to the extent referenced. All materials and fittings supplied and work performed herein shall conform to the latest edition of the applicable industry, codes, standards, references and recommended practices listed below. In case of conflict, the requirements of the specification shall prevail. The publications are referred to in the text by abbreviation only:

B. Applicable Standards:

1. ASTM D2657 – Heat Joining of Polyolefin Pipe and Fittings

3. ASTM D3261 – Butt Heat Fusion Polyethylene Plastic Fittings for Polyethylene Plastic Pipe and Tubing

4. ASTM D638 – Standard Test Method for Tensile Properties of Plastic

5. ASTM F1055 – Electrofusion Type Polyethylene Fittings for Outside Diameter Controlled Polyethylene Pipe and Tubing

6. ANSI/EIA/TIA-455-B – Standard Test Procedure for Fiber Optic Fibers, Cable, Transducers, Sensors, Connecting and Terminating Devices, and other Fiber Optic Components

7. ANSI/EIA/TIA-455-61 - FOTP61. Measurement of Fiber or Cable Attenuation

8. ANSI/EIA/TIA-526 - Standard Test Procedures for Fiber Optic Systems

9. ANSI/EIA/TIA-526-7 - OFSTP7. Measurement of Optical Power Loss of Installed Single-Mode Fiber Cable Plant

10. ANSI/EIA/TIA-568-B.3 - Optical Fiber Cabling Components Standard

11. ANSI/EIA/TIA-598-A - Optical Fiber Cable Color Coding

12. ANSI/EIA/TIA-606-A - Administration Standard for Commercial Telecommunications Infrastructure

PART 2- PRODUCTS

2.01 FIBER-OPTIC CABLE

A. The fiber cable will have a fiber count of ninety six (96).

2.02 QUALITY ASSURANCE

A. Electrical Components, Devices, and Accessories: Listed and labeled as defined in NFPA 70, Article 100, by a testing agency acceptable to authorities having jurisdiction, and marked for intended use.

B. Comply with the NESC and NFPA 70 requirements regarding fiber optic cabling and other fiber optic cabling installation and testing standards as referenced above.

2.04 ACCESSORIES

B. The excavation of fiber pull box shall be installed according to the plans and specifications. A layer of coarse, free draining aggregate ¾” washed, a minimum of twelve (12) inches thick shall be used to obtain a level subgrade and to provide full base support prior to vault placement.

C. Vault openings shall be enlarged, if necessary, by drilling to accept the diameter of conduit being installed. A core type bit shall be used to make the opening. The finished diameter of the enlarged opening shall not exceed the outside diameter of the conduit by more than one half (½) an inch. The space between the conduit and the opening shall be filled with Contractor-supplied nonshrink epoxy grout or silicone sealant. Contractor shall not damage conduit to splice vault connection during the placement of backfill

material. Care shall be taken to ensure that conduits align both horizontally and vertically.

2.05 CONDUIT REQUIREMENTS

A. Two (2) one-and-one-half inch (1.5”) SDR 11 HDPE shall be furnished and installed by the Contractor. The HDPE pipe shall be manufactured in accordance with standards established by the Plastic Pipe Institute for fiber optic ducts. Fittings, such as couplers and plastic caps, shall be as recommended by the manufacturer of the conduit. Only external couplings shall be used. All couplings shall provide an airtight seal capable of withstanding 110 psi for five (5) minutes, as measured by static pressure test.

1. All HDPE ducts shall have a pulling tape installed.

PART 3 – EXECUTION

3.01 HANDLING

A. All cable and conduit handling and storage shall be performed in strict accordance with the manufacturer’s recommendations. Cable shall be supported at all times during handling, without short bends or excessive sags, and shall not be permitted to lie on the floor or ground without suitable protection.

3.02 CABLE INSTALLATION

A. A suitable pulling lubricant, consistent with the cable manufacturer’s recommendations, shall be used when pulling in cables. The Contractor shall ensure that the pulling lubricant is not injurious to the cable. After the cable has been pulled, the exposed cable shall be wiped clean of lubricant with a cloth. All cables not terminated immediately after pulling shall have their ends sealed.

B. During installation, care shall be taken so as not to exceed manufacturer’s minimum bend radius for all cables. Tension in the cable during installation shall not exceed the manufacturer’s specification for tensile loading. Pulling tension shall be continuously monitored during installation. Fiber cable shall be pushed/pulled in a steady continuous manner. Adequate communications must be established and maintained between the cable feeding location, the pulling equipment, and all manned intermediate fiber optic pull boxes during all pulling operations. The cable installation personnel shall be experienced with specific knowledge of the cable manufacturer’s recommended procedures, and as a minimum shall conduct their work to conform to the following:

1. Cable tensile limits and tension monitoring devices shall not exceed cable pull tension and bend limits.

2. All cable shall be constantly lubricated during the pulling procedures.

C. The tensile and bending limitation for fiber optic cables shall not be exceeded during installation under any circumstances. Large diameter wheels, pulling sheaves, and cable guides shall be used to maintain the specified bending radius. All equipment shall be designed to prevent a preset pulling tension from being exceeded. The pulling tension set-point shall be determined by the fiber optic cable manufacturer.

D. After the cables are installed and spliced, they shall be racked and spare conduits shall be sealed. A minimum of 150’ of fiber optic cable shall be stored at each vault. A minimum of 850’ of fiber optic cable shall be stored at the two project end points. Cables shall be loosely secured in racked position with tie-wraps or equal. Imprinted plastic coated cloth identification and warning tags shall be securely attached to the cables. All coiled cable shall be suitably protected to prevent damage to the cable and fibers. Racking shall include securing cables to brackets and racking hardware that extends from the sidewalls of the panel. When all cables at each pull box are securely racked, unused conduits and void areas around conduit containing cables shall be sealed using Semco compound or similar material. Contractor shall install tie wraps using a tension-controlling cutting device. Tie wraps and other securing hardware shall be rated as required for the installation environment.

L. The terminated ducts should be sealed according to the plans and specifications.

M. Duct seals shall be made with rubber conduit plugs, Waterplug, or B Duct Sealer depending upon existing conditions. Rubber conduit plugs are the preferred choice.

N. If the cable must be unreeled during installation, Contractor shall use the "figure-eight" configuration to prevent kinking or twisting. Fiber optic cable shall not be coiled in a continuous direction except for lengths of 100 ft (30 meters) or less. The size of the "figure-eight" shall be a minimum of 15 ft (4.5 m) in length, with each loop about 5 ft (1.5 m) to 8 ft (2.4 m) in diameter. When "figure-eight" long lengths of cable, Contractor shall take steps to relieve pressure on the cable at the crossover of the eight by placing cardboard shims at the crossover, or by forming a second "figure eight."

O. During construction, the Contractor shall not cut the cable under any circumstance, which deviates, from the approved cable-pulling plan without consulting SMPA.

P. If the cable is laid on the pavement/ground during installation, Contractor shall provide protection under the cable to eliminate the possibility of sheath damage. Contractor shall provide barricades or other means of preventing vehicular or pedestrian traffic in the area.

3.03 CONDUIT JOINTING/SPLICING

A. Conduit jointing shall be completed before or as the pipe is installed. All joints shall be made secure. Splices shall be capable of withstanding 110 psi air pressure for five (5) minutes as measured by static pressure test.

3.04 CONDUIT BENDS

A. Where directional changes are required, the conduit shall be bent in smooth, uniform bends. Bends shall be made to the minimum radius as required to place the cable and to meet the cable manufacturer's recommendation and shall not result in a reduced cross-sectional area.

B. HDPE Conduit: HDPE conduit bends shall be gradual and not cause any kinks in the conduit.

3.05 CONDUIT SEALING

A. When connections are not being made to additional pipe, the Contractor shall seal ends of conduits to keep dirt and debris from entering conduits. Manufactured compression plugs or other approved duct seals shall be used in sealing conduit and casing pipe ends. Plugs shall accommodate cable if they are placed concurrently. Voids between cable and surrounding ducts shall also be sealed if placed concurrently.

3.06 SLACK STORAGE

A. Each pull box shall have a minimum of 150' of spare fiber optic cable coiled and securely stored in hangers in the vault. The coil should be racked in a location where it will not be subjected to damage, preferably on the vault wall behind in-place cables. Tie the coil securely in place, although not to the point of compressing the cable sheath, with plastic cable ties.

3.07 CABLE SPLICING

A. Should splicing be required, and with permission SMPA, splice all fiber strands in a straight through configuration using standard fiber color codes. Individual fiber splicing losses shall be a maximum of .12 dB bi-directionally averaged per fiber. Contractor shall furnish and install any splices and related splice enclosures. Any individual fiber not meeting the .12 dB maximum bi-directionally averaged shall be reworked up to an additional two times. The mean fiber splice bidirectional loss per fiber cable shall be .08 dB or less. It may be necessary for the contractor to rework any of these splices that do not meet this specification. Any cost to perform this work originally and any rework is the sole responsibility of the contractor.

3.08 CABLE TESTING AFTER INSTALLATION

A. Contractor shall be responsible to test the cable to determine that all the fibers are intact. Cable shall be tested using an Optical Time Domain Reflectometer (OTDR) and optical power meter and the attenuation shall not exceed the values shown on the factory test including all pigtail splices and termination required for the test procedure. All fibers in a cable shall be tested. OTDR traces shall be recorded in both directions on each strand at 1310 and 1550 nanometers. These traces shall be compared to pre-installation baseline

tests to determine the quality and workmanship of the installed cable. The Contractor at no cost to SMPA shall replace cable damaged in any way during the installation.

END OF SECTION 22055

Duct Bank System

PART 1 – GENERAL

1.01 SCOPE

A. This section covers furnishing and installation of a 24.9 kV Concrete Encased Duct Bank System.

B. The Contractor shall construct a complete duct bank system to include all conduit, conduit spacers, tracer wires and warning tape, as shown on the drawings and/or as specified.

C. The Contractor must notify SMPA and the Engineer three (3) days prior to duct proofing to allow for coordination to witness the proofing.

PART 2 – PRODUCTS

2.01 GENERAL

A. The Contractor is responsible for furnishing all necessary materials for the complete duct bank system. This shall include all hardware and miscellaneous materials as required. This requirement includes conduit spacers.

B. The Contractor is responsible for furnishing and installing communication handholes and tracer wire test stations as shown on the drawings.

PART 3 – EXECUTION

3.01 DUCT BANK

A. All concrete encased duct banks shall be per the detail drawings. Two sack concrete slurry will be used.

B. All ducts shall be cleaned to the satisfaction of SMPA using tight fitting rag bundles, tested (mandrel), pull ropes installed and plugged at conduit terminations.

C. Concrete for encased duct lines shall be cured for 72 hours before motor traffic is allowed to pass over it.

D. All 8”, 4”, 2”, and 1.5” ducts shall be mandrelled in the presence of SMPA. The Contractor shall notify SMPA three (3) days prior to starting the work.

E. All terminated ducts should be sealed according to the plans and specifications.

3.02 SCOPE

A. All duct bank/trench installation work shall be subject to construction observation and approval of SMPA.

B. Duct installation shall commence only after trench is observed and approved by SMPA.

C. Trench backfilling shall commence after duct bank installation is observed and approved by SMPA.

3.03 INSPECTION

A. The completed duct lines shall be cleaned and field tested and pulling lines and plugs installed before final acceptance. The Contractor shall notify SMPA a minimum of 3 days before starting this work. A representative of SMPA shall be present at all times until the cleaning, and testing are completed and pulling lines and plugs are installed to his/her satisfaction. The Contractor must provide written approval of acceptance of the duct bank system before SMPA will provide final acceptance.

B. The Contractor shall install pulling line. Contractors shall pull a rag bundle through each conduit run to ensure duct is free of sand, dirt, and debris. This shall be performed to the satisfaction of SMPA’s Inspector.

C. The Contractor shall pass a bullet-shaped wooden or metallic test mandrel through the entire length of each duct run of the duct line to test for freedom of burrs and obstructions.

D. The test mandrel shall be SMPA approved.

E. A wire brush and mandrel may be used together to clean and test the duct lines. A backup cord attached to the mandrel shall be used for withdrawal in case it cannot pass through the duct line.

F. Scarring found on the mandrel deeper than 1/32 inch, other than that caused by normal abrasion between the duct line and bottom of the mandrel, shall be taken to indicate that burrs and/or obstructions are present in the duct run. SMPA inspector shall determine when the mandrel shall be re-run. The Contractor shall remove such burrs and/or obstructions after which the test mandrel is passed through again. The process will be repeated until a satisfactory result is obtained.

G. After completion of cleaning and testing of the duct line, the Contractor shall install in each duct run a mule tape pull line or equivalent and plug both ends of each duct with plastic plugs.

END OF SECTION 22080

PVC Conduit

PART 1 – GENERAL

1.01 SCOPE

A. SMPA's approved conduit material is a 4" schedule 40 Electrical grade PVC conduit, 2" Electrical grade PVC, 1.5" SDR 11 HDPE conduit.

B. The conduit accessories shall be of the same type material as the conduit selected.

C. The Contractor shall install all conduit, fittings (i.e., couplings, adapters, end bells, etc.), spacers, and tie wire. All other miscellaneous materials for a complete conduit system installation shall be provided by the Contractor.

PART 2 – PRODUCTS

2.01 PLASTIC CONDUIT STORAGE AND TRANSPORTATION

A. Cover conduit that is to be stored for more than two (2) weeks within 24-hours of receiving.

B. Provide support for the full length of the conduit when transporting or storing long lengths (20'). Do not permit unsupported overhang.

PART 3 – EXECUTION

3.01 PLASTIC CONDUIT INSTALLATION

A. A fine tooth wood saw may be used to cut the conduit. Make a square cut and remove all burrs. Inside edge must be beveled such that a ridge does not occur that could damage the 24.9 kV cable jacket.

B. Field bending shall be done with a SMPA-approved conduit heating and bending process and only with craftsman experienced at bending similar conduit.

3.02 PLASTIC CONDUIT SOLVENT-CEMENTED JOINTS

A. The PVC cement should be obtained from the conduit manufacturer. Thinners are not recommended.

B. Apply a liberal and uniform coat of cement to the conduit for a length equal to the depth of the socket. Also, apply sufficient cement to wet the socket of the fitting. Avoid excess cement on the fitting, as it is wiped into the joint and tends to weaken the pipe. Do not use plastic bristle brushes.

C. Slip conduit into the socket of the fitting with a slight twist until it bottoms. Hold the joint for 15 seconds so the conduit does not push out of the fitting. Do not twist or drive the pipe after the insertion is complete. All conduit shall have belled ends.

D. Cure the joined members for at least five (5) minutes before disturbing or applying stress to the joint. After this initial cure, care must be exercised in handling to prevent twisting or pulling the joint. In damp weather, increase this interval to allow for slower evaporation of the solvent. Where possible, assemble all conduit above ground and allow it to lay undisturbed while curing before lowering it into the ditch.

E. Wipe off the excess cement left on the outer shoulder of the fitting.

F. Another fitting or section of conduit may be added to the opposite end within two (2) minutes, if care is exercised in handling so that strain is not placed on the previous assembly.

G. Assemble above ground, any joint included in a section of conduit to be bent in the ditch, and allow it to lay undisturbed for at least two (2) hours before installation. In cases where a plastic connection is made with the union under stress due to misalignment or other factors, stake it out to relieve stress on the joint until the conduit is backfilled or encased.

H. To minimize accidental mechanical damage, do not expose conduit in an open trench longer than is absolutely necessary.

I. Conduit ends should be plugged and covered with sand or gravel to prevent ingress of mud and water if left for an extended period of time.

3.03 PLASTIC CONDUIT TEMPERATURE

A. Expose all plastic conduit and fittings to the same temperature conditions for a reasonable length of time before assembly.

B. Precautions – Due to expansion and contraction of the plastic conduit of 1-1/2 inches per 100 feet for every 20°F change in the temperature, allow extra conduit footage at each tie-in for contraction when the conduit temperature is higher than that of the earth; or extra room for expansion if the converse condition exists.

3.04 PLASTIC CONDUIT TERMINATION

A. End bells shall be used to terminate all conduits.

B. The terminated ends of the conduit in an underground structure must be free of support for a distance of at least ten (10) feet from the structure. The conduit will be aligned and supported inside the structure with proper spacing.

C. The ends of the conduit shall be sealed with a plastic cap, plug, or approved substitute at the end of each day's work, when work on duct installation has to be interrupted, or where ducts may be submerged in water.

END OF SECTION 22090

Concrete Slurry

PART 1 – GENERAL

1.01 SCOPE

A. This section shall apply to concrete slurry for use in the duct bank when called for on the drawings. The furnishing, transporting and placing of the concrete slurry; and curing and finishing the structures shall conform to the requirements specified herein.

1.03 QUALITY ASSURANCE

A. Qualification of Manufacturers:

1. Manufacturers of the products specified for work under this Section shall be in the business of manufacturing similar products and shall be able to provide a history of successful production of the specified products.

PART 2 – PRODUCTS

2.01 MATERIALS

A. Portland Cements: Cement for all classes of concrete shall conform to the requirements under ASTM C150 "Standard Specification for Portland Cement".

B. Aggregates:

1. Aggregates shall conform to the specifications of ASTM C33 for use in concrete and ASTM C144 for use in masonry mortar.

2. The maximum aggregate size for use in thermal concrete shall be 3/8 inch.

3. Fine Aggregate. Fine aggregate shall be clean, hard, dense, free of foreign matter and shall consist of beach sand, manufactured fines, or a combination thereof.

4. Coarse Aggregate. Coarse aggregate shall consist of crushed stone or gravel manufactured from clean, hard, tough, dense, durable rock and free from adherent coatings.

C. Water: Water shall be clear and free from injurious amount of oil, acid, salt, alkali, organic matter, or other deleterious substances.

D. Admixture: Calcium may not be used. No admixture of any kind shall be used without the written consent of SMPA.

2.02 CONCRETE SLURRY STRENGTH AND QUALITY

A. Concrete slurry shall be a slurry-sand mixture containing two sacks per cubic yard of Portland cement as specified above.

B. Unless specified otherwise on the plans, all concrete shall meet the following requirements:

1. Slump: prior approval required from SMPA
2. Aggregate: maximum size 3/8”
3. Admixture: prior approval required
4. No air entrainment allowed

PART 3 – EXECUTION

3.01 MIXING AND PLACING

A. Ready-Mixed Concrete Slurry:

1. Ready-mixed concrete and concrete slurry shall be used and the mixing, transporting, placing, and the quality shall meet the requirements as specified under ASTM C94.

B. Placing Concrete and Concrete Slurry:

1. SMPA shall be notified twenty-four (24) hours before placing any concrete or concrete slurry. Concrete and concrete slurry shall be placed only in the presence of SMPA’s representative.

2. Concrete and concrete slurry shall be batched only in such quantities as are required for immediate use and placement. Any concrete, as determined by SMPA, having initial set before placing and finishing shall be discarded and shall not be used for the work. No remixing with water or with other materials will be permitted once the initial set has taken place.

3. Concrete and concrete slurry shall be placed as nearly as is possible in its final position so as to avoid segregation of the materials. The placement shall be

completed within thirty-(30) minutes after water is first added to the mix. However, when the concrete and concrete slurry is continually agitated, the time may be extended to one and one-half (1-½) hours. Re-tempering will not be permitted after the concrete and concrete slurry has stiffened.

4. Concrete and concrete slurry shall be placed on clean, damp surfaces, free from water, and in horizontal layers not exceeding eighteen (18) inches in thickness.

5. Concrete slurry shall not be dropped a distance of more than five (5) feet unless approved in writing by SMPA.

6. Unless otherwise authorized, all concrete and concrete slurry shall be compacted by use of hand spades. The spade shall be inserted into the fresh concrete to the level of the bottom of the excavation on both sides of each row of the trench and at intervals not greater than nine (9) inches along the trench. Concrete and concrete slurry vibration shall only be done upon receipt of written approval by SMPA.

D. Curing:

1. Curing operations shall be started as soon as the concrete and concrete slurry has attained initial set. The method and length of curing shall be approved by SMPA.

2. Concrete slurry for protective cap shall be cured for seventy-two (72) hours before motor traffic is allowed to pass over it.

E. Cold Weather Concreting:

1. All concrete materials and all forms and ground, with which the concrete is to come in contact with, shall be free from frost.

2. When atmospheric temperature is below 40°F, the aggregates and/or water for the concrete shall be heated uniformly such that the temperature of the aggregates and water mixture at the time of introduction of the concrete and the temperature of the concrete at the time of placement shall be not less than 60°F or more than 95°F. The aggregates shall be free from ice, frost and frozen lumps when introduced into the mixture.

3. All concrete and concrete slurry which has not attained an age of twenty-four (24) hours before the atmospheric temperature falls below 40°F, shall be covered with frame work with satisfactory covering material and then covered with at least six (6) inches of loose dirt or other insulating material that will maintain an air temperature surrounding the new concrete at a minimum of 50°F during the curing period. It shall be the Contractor’s responsibility to see that the concrete test cylinders receive the same protection as the concrete footings.

4. Concrete and concrete slurry placement will not be allowed to continue when the atmospheric temperature is 38°F and falling. Concrete and concrete slurry placement will not be allowed to begin until the atmospheric temperature is 34°F

and rising. Cold weather concrete work can be approved, but Contractor must submit procedure and receive SMPA approval prior to pour.

3.02 FORMS

A. The finished forms shall be true to the required dimensions and grades, with smooth surfaces, mortar tight joints, and of sufficient strength to resist springing out of shape during the placing of concrete. The inside surfaces shall be thoroughly coated with commercial quality form oil. Forms may be of wood, metal, or any other material and shall be free from defects. All exposed surfaces shall be formed with new plywood or with metal.

3.03 TESTING

A. The following field tests shall be made at the point of placement in the presence of SMPA. Equipment, supplies and qualified personnel for field-testing shall be supplied. Tests shall be performed by an SMPA-approved independent testing lab retained and paid for by the Contractor.

1. Slump:
   a. A slump test for concrete shall be made for every 40 cu yard per day or once per day at the discretion of SMPA. Slump shall be in accordance with ASTM C143.

2. Air Content:
   a. Air content shall be determined from each test cylinder taken, in accordance with ASTM C231. Air content does not need to be taken in the field but shall be reported on certified test reports on cylinders taken.

3. Compression Tests:
   a. Two compression test cylinders shall be made for each 40 cubic yards of concrete placed or once per day. One (1) cylinder of each set shall be tested at seven (7) days with the other cylinder being tested at 28 days.
   b. Test cylinders shall be marked or tagged with the date, temperature, time of day cylinders were taken, location taken, delivery truck or batch number and the slump.

4. Report:
   a. The Contractor shall furnish SMPA certified reports of all tests.

3.04 SUBMITTALS

A. Concrete mix and specific quarry from which the testing was derived shall be submitted to SMPA based on testing done by an approved laboratory.

The Contractor shall furnish SMPA certified reports of all tests.

3.05 LABORATORY QUALIFICATIONS

A. An SMPA approved independent testing laboratory shall be contracted with to provide the cylinder preparation, site testing and compression testing.

END OF SECTION 22100

Concrete Pre-Cast Vaults

PART 1 – GENERAL

1.01 SCOPE

A. This section establishes the requirements for receiving and installing concrete pre-cast vaults and handholes. The provisions contained herein outline the general parameters and appurtenances required for the design and construction of the number of vaults specified in the bid unit items.

B. The Contractor shall be responsible for the installation of the vaults required to their appropriate locations.

PART 3 – EXECUTION

3.03 EXCAVATION AND BACKFILL

A. Excavation for the vault shall be such that the top of the vault with associated grade rings, vault rings and covers shall be at final grade ± ¼ inch.

B. Excavation shall be deep enough so as to allow twelve-inches (12”) of engineered fill (A.B.C.) compacted to ninety-five percent (95%) maximum density with a bedding layer two-inches (2”) thick on top of the engineered fill. Bedding material shall consist of well-graded sand with one hundred percent (100%) passing a #4 sieve.

C. Excavation shall be protected, braced and shored to prevent caving of the excavation in accordance with federal, state and local safety regulations. All excavations shall be protected from inadvertent pedestrian and vehicular traffic in accordance with federal, state and local safety regulations.

D. Excavation of the vault shall be a minimum of two (2) foot larger than the vault in circumference. A layer of coarse, free draining aggregate ¾” washed, a minimum of twelve (12) inches thick shall be used to obtain a level subgrade and to provide full base support prior to vault placement.

E. Subject to the provisions specified herein, the material obtained from project excavations may be used as backfill provided that all organic material, rubbish, debris and other

objectionable material are first removed. Broken Portland cement concrete and bituminous type pavement, obtained from the project excavations will not be permitted in the backfill. Rocks greater than eight (8) inches in any dimension will not be permitted in backfill material. Rocks greater than two and one-half (2-½) inches in any dimension will not be permitted in backfill placed within twelve (12) inches of pavement subgrade or structures. Where rocks are included in the backfill, they shall be mixed with suitable excavated material so as to eliminate voids. It shall be understood that the removal of all boulders or other interfering objects and backfilling of voids left by such removals shall be at the expense of the Contractor and no direct payment for the cost of such work will be made. The cost of such work shall be included in the prices bid for the various items of work.

F. Backfill or fill, as the case may be, for pre-cast structures, such as, but not limited to, retaining walls, vaults and other structures shall start at the base of the structures. Backfill placed around the structures shall be deposited on all sides to approximately the same elevation at the same time. Unless otherwise specified, the periods of time set forth in the following table after which the Contractor may place backfill or fill against or over the top of any cast-in-place structures are predicted on the use of concrete top, which no admixture has been added for the purpose of obtaining a high early strength.

	Operation Against Sides of Structures (Days)	Location Over Top of Structure (Days)
Placement of loose backfill	5	21
Densification of backfill	7	28

G. If native soil material is unavailable, imported backfill material shall be used. In that case, the Contractor shall deliver, not less than ten (10) days prior to intended use, a sample of the material to SMPA with a proctor for such material. The sum of the plasticity index and the percent of the material passing a #200 sieve shall not exceed twenty-three (23). The maximum diameter size shall not exceed four-inches (4”). The uniformity coefficient (D70/D23) shall be greater than three (3). The sample shall be clearly identified as to source, including street address and community of origin. SMPA will approve the suitability and placement method of such imported materials. Should the imported material not be substantially the same as the approved sample, it shall not be used and shall be removed from the job site at the Contractor's expense.

H. Backfill shall be mechanically compacted by means of tamping rollers, sheepsfoot rollers, pneumatic tire rollers, vibrating rollers, or other mechanical tampers. All such equipment shall be of a size and type approved by SMPA. Material for mechanically compacted backfill shall be placed in horizontal lifts, which, prior to compaction, shall not exceed a maximum lift depth of eight-inches (8”). Each layer shall be placed and compacted until specified relative density has been attained.

I. The trench shall be backfilled to grade level with all backfill compacted to a density of ninety-five percent (95%). The interval at which compaction tests shall be taken shall be per ASTM D1557.

END OF SECTION 22120

Sectionalizing Cabinets

PART 1 – GENERAL

1.01 SCOPE

A. This section establishes the requirements for installing sectionalizing cabinets. The provisions contained herein outline the general parameters and appurtenances required for the design and construction of the number of sectionalizing cabinets specified in the bid unit items.

B. Successful bidder shall be responsible for the installation of the sectionalizing cabinets required to their appropriate locations. Each sectionalizing cabinet shall conform to the drawings.

D. Sectionalizing cabinets shall be furnished by SMPA.

PART 3 – EXECUTION

3.01 GROUNDING AND GROUNDING TAILS

A. The 5/8”X 8’ copper ground rod shall be clamped to the #6 AWG copper ground ring by a clamp designed for bonding use.

B. Placement of grounding rods shall be in accordance with that shown on the individual Performance Drawings, provided by Contractor.

3.02 EXCAVATION AND BACKFILL

A. Excavation for the sectionalizing cabinet shall be such that the top of the grounding sleeve pad is a maximum of 6 inches above grade.

B. Excavation shall be protected, braced and shored to prevent caving of the excavation in accordance with federal, state and local safety regulations. All excavations shall be protected from inadvertent pedestrian and vehicular traffic in accordance with federal, state and local safety regulations.

C. The excavation of the sectionalizing cabinet shall be a minimum of two (2) feet larger than the sectionalizing cabinet circumference. A layer of coarse, free draining aggregate ¾” washed, a minimum of twelve (12) inches thick shall be used to obtain a level subgrade and to provide full base support prior to sectionalizing cabinet placement.

D. When entering the sectionalizing cabinet the conduit should be run underneath the ground sleeve with enough overlap to allow the cables to sweep and connect to each junction interface point.

E. The backfill used for fill material around the sectionalizing cabinet shall be approved native soil backfill. If native soil material is unavailable, imported backfill material shall be used. The native soil shall have a thermal resistivity of 115 °C-cm/W at 3% moisture content.

END OF SECTION 22125

Grounding

PART 1 – GENERAL

1.01 SCOPE

A. This section covers the furnishing and installation of all grounding materials.

PART 2 – PRODUCTS

2.01 EQUIPMENT

A. All grounding equipment and materials shall be furnished and installed in accordance with these specifications and the Contractor's shop drawings.

PART 3 – EXECUTION

3.01 GROUNDING SYSTEM STRUCTURE

A. The grounding system associated with the 24.9 kV-cable system shall be as follows and the responsibility of the Contractor:

1. All ground connections made by the Contractor to SMPA's ground system shall be accomplished mechanical means except those exothermal connections shown in the drawings..

2. The Contractor shall not cover up exothermal welds with backfill until inspected and approved by SMPA.

3. If installation of ground rods is not practical due to depth of rock subsurface conditions (as determined by SMPA), a 150’ #2 AWG bare copper conductor in the preceding or succeeding trench may be placed in the backfill and connected into the vault in lieu of the ground rod. Any use of this grounding method must be approved in advance by SMPA. It is the Contractor’s responsibility to demonstrate the suitability of ground rod installation prior to backfilling adjacent

trenches in the event that the bare copper ground is to be used in lieu of the ground rod.

3.02 CABLE GROUNDING

A. Terminations shall be grounded per manufacturer's recommendations.

B. Concentric neutrals shall be multi-point bonded at each vault, sectionalizing cabinet, and transition structure.

END OF SECTION 22130

Earthwork

PART 1 – GENERAL

1.01 SCOPE

A. This section covers general earthwork and includes preparation of the construction areas; removal and disposal of debris; excavation and trenching; the handling, storage, transportation, and disposal of excavated material; sheeting, shoring, and protection work; preparation of subgrades; protection of adjacent construction; backfill; construction of fills and embankments; surfacing and grading; and other appurtenant work, all in accordance with applicable federal, state and local laws, ordinances, and codes.

PART 2 – PRODUCTS

2.01 WARNING TAPE

A. Safety warning tape shall be installed as shown on the drawings.

PART 3 – EXECUTION

3.01 SHEETING AND SHORING

A. The stability of previously constructed structures and facilities shall not be impaired or endangered by excavation work. Previously constructed structures and facilities include all transition and termination structures.

B. Adequate sheeting and shoring shall be provided to protect and maintain the stability of previously constructed structures and facilities and the sides of excavations and trenches until they are backfilled. Sheeting, bracing, and shoring shall be designed and built to

withstand all loads that might be caused by earth movement or pressure and shall maintain the shape of the excavation under all circumstances. Drawings of all shoring details as required by OSHA regulations 29 CFR Part 1926 dated July 1, 2007, or latest revision shall be furnished to SMPA prior to excavation.

3.02 OVER EXCAVATION

A. Material excavated beyond the limits of the trench details shall be backfilled using approved backfill.

3.03 SITE PREPARATION

A. Subgrades for permanent construction, including subgrades for fills and embankments, shall be stripped of all surface materials to include all topsoil.

B. All combustible and hazards waste materials shall be removed from the construction areas. Open burning is not permitted.

3.04 FILLS AND EMBANKMENTS

A. If, after excavation and installation of direct buried cables, additional fill material is necessary, it shall be of the same specified backfill described previously. Surface subgrades shall be compacted and well bonded to the previous layers of fill. All material deposited in subgrades shall be earth only and shall be free from rocks or stones, debris, and other objectionable materials. All layers exceeding eight (8) inches must be approved by SMPA.

3.05 STRUCTURE AND TRENCH SUBGRADES

A. Subgrades for the bottom of trenches shall be firm, dense, free from mud, thoroughly compacted, and sufficiently stable to remain firm and intact. Compaction shall be to at least 90 percent of the maximum dry density at optimum moisture content as determined by ASTM D1557 or to meet local codes. Intervals for compaction testing shall be per ASTM D1557.

B. Subgrades that are otherwise solid, but become mucky on top due to construction operations, shall be stabilized by reinforcing them with one (1) or more layers of crushed rock or gravel.

C. The finished elevation of stabilized structure subgrades shall not be above the subgrade elevations indicated on the drawings.

3.06 STRUCTURE BACKFILL

A. Backfill around the outside of structures shall be deposited in layers not to exceed six (6) inches in un-compacted thickness. Backfill shall be mechanically compacted to at least 95 percent of the maximum dry density. The material shall be placed at optimum moisture content as determined by ASTM D1557. Compaction of structure backfill by rolling will be

permitted provided the desired compaction is obtained and damage to the structure is prevented. Compaction of structure backfill by inundation with water will not be permitted.

B. Backfill material shall be composed of approved backfill only. Surface subgrades may be earthy fills not to exceed one (1) foot in thickness, and free from rock, stone, debris, and any other objectionable material.

C. No tamped, rolled, or otherwise mechanically compacted backfill shall be deposited or compacted in water.

D. All subgrade backfill material shall consist of loose earth having a moisture content required to obtain the specified density of the compacted soil. Moisture content shall be distributed uniformly. Water added for correction of moisture content shall be distributed uniformly prior to compaction. Granular material shall be wet, not just damp, when compacted.

3.08 TRENCH WIDTHS

A. Trenches shall be excavated to a minimum width according to the plans and that will provide adequate working space for safe and proper duct bank / cable installation.

B. Where necessary and applicable to reduce earth load on trench banks to prevent sliding and caving, banks may be cut back on slopes that shall not extend lower than one (1) foot above the top of the duct bank.

3.09 MECHANICAL EXCAVATION

A. Mechanical equipment shall not be used in locations where its operation would cause damage to buildings or structures above or below ground. Hand excavating methods shall be used in these locations.

3.10 TRENCH DEPTH

A. Trench depths shall be as per the plans.

3.11 TRENCH BACKFILL

A. Trench backfill shall be compacted for the full depth of the trench above the duct bank. Approved native soil backfill shall be used.

B. Compacted backfill material shall be either trench excavated material or material furnished by the Contractor from his own sources, and shall be acceptable to SMPA.

C. Backfill shall be placed in uniform layers not exceeding eight (8) inches in uncompacted thickness. Increased layer thickness may be permitted for noncohesive material, if the specified compacted density is obtained. The method of compaction and the equipment used shall be appropriate for the material being compacted and shall not transmit damaging

shocks to the cable. Unless specifically stated otherwise, trench backfill shall be compacted to not less than 90 percent of the maximum dry density.

3.12 FINAL GRADING

A. After all construction work has been completed, all ground surface areas disturbed by construction or construction plant and operations shall be graded. The grading shall be finished to the contours and elevations indicated on the drawings or, if not indicated, to the matching contours and elevations of the original, undisturbed ground surface. The final grading shall provide smooth uniform surfaces and effective drainage of the ground areas.

B. Fills, embankments, and backfills that settle or erode before final acceptance of the work, and structures, shall be repaired by the Contractor at the Contractor's expense. The settled or eroded areas shall be filled, compacted, and graded to conform to the elevation indicated on the drawings or to the elevation of the adjacent ground surface. Damaged facilities shall be repaired in a manner acceptable to SMPA.

3.13 DISPOSAL OF MATERIALS

A. Surplus earth and materials not suitable for the work shall be spoiled in a manner and location selected by the Contractor and acceptable to SMPA. Disposal shall be in accordance with all federal, state, and local requirements pertaining to construction landfills.

END OF SECTION

Restoration of Driveways and Pavement

PART 1 – GENERAL

1.01 SCOPE

A. This section covers the restoration of sidewalks, driveways and pavement.

PART 2 – PRODUCTS (Not Applicable)

PART 3 – EXECUTION

3.01 RESTORATION

A. It is understood that such additional replacement of pavements, driveways, and sidewalks as may be required because of shoring or bracing, undermining, settlements, and over excavating will not be included in the measurement for replacing of the above-mentioned items and such replacements shall be the Contractor’s responsibility. Also, any additional

replacement as required by local/state ordinances or as directed by local/state inspectors shall not be included in the measurement for restoration. Contractor shall provide for such allowances in his lump sum price.

B. All road restoration shall be done to applicable local, state and federal Pavement Standard Details.

C. Pavement in the road right of way shall match the pavement depth when repaving the shoulder/road way and all San Miguel County requirements.

END OF SECTION

Revegetation

PART 1 - GENERAL NOTES

A. All areas disturbed during construction such as excavations in undisturbed areas, storage areas, staging areas, and temporary construction access shall be revegetated according to these specifications. Any additional area disturbed beyond the Limits of Construction shall be revegetated according to these specifications at the Contractor's expense.

B. Upon completion of grading and construction, and prior to revegetation, all areas to be revegetated will be inspected by SMPA. The Contractor shall notify SMPA at least ten working days prior to implementation of revegetation treatments to schedule the required inspection(s). Limits of treatment areas will approved in the field at that time. Revegetation treatments shall not be initiated without approval from SMPA.

C. Revegetation treatments shall be installed per these specifications, and the contract stipulations, and shall consist of the following treatments:

Treatment A: Flat to gentle slopes less than 3:1 (H:V) below 7,000 feet in elevation. Topsoil salvage in select areas, seedbed preparation, drill seeding with low elevation seedmix, hydromulch application.

Treatment B: Flat to gentle slopes less than 3:1 (H:V) above 7,000 feet in elevation. Topsoil salvage select areas; seedbed preparation, drill seeding with high elevation seedmix, hydromulch application.

Treatment C: Slopes steeper than approximately 3:1 (H:V) designated by SMPA. Seedbed preparation, broadcast seed with low or high elevation seedmix as appropriate; double the application rate, geotextile installation.

Treatment D: Sod salvage and replacement. Grass sod salvage prior to excavation, sod replacement, broadcast seed, geotextile installation.

PART 2 - SUBMITTALS

A. Manufacturer specifications for the tackifier product shall be provided to SMPA at least two weeks prior to application for approval.

PART 3 - PRODUCTS

3.1 Seed

A. Seed shall be clean new crop seed, purchased pre-mixed on a Pure Live Seed basis as defined in the permit stipulations included in this contract.
B. Seed shall be delivered to the site in original unopened containers bearing the dealer's guaranteed analysis for percentages of mix, purity, germination percentage, and weed seed content and shall meet the freedom from noxious weeds requirements.
D. No substitutions in the seed mixtures will be accepted without written approval from SMPA.

3.2 Geotextile

Erosion control blanket will be manufactured under the trade name ROLANKA BIODEGRADABLE COIR-STITCHED BLANKET BIO-D OCF, or equivalent approved SMPA.

3.3 Hydromulch

A. The hydromulch shall consist of 100 percent wood fiber, pre-blended with high viscosity organic guar-gum tackifier, such as manufactured under the trade name 'CONWED FIBERS 2000.'
B. The hydromulch slurry shall be mixed as per manufacturer's recommendation.
C. The dried film permeability shall allow exchange of air and moisture, have an effective life of at least one year, and shall not re-emulsify when cured.

3.4 Tackifier

A. The tackifier shall not contain any growth or germination-inhibiting factors; shall be colored reen with a non-toxic dye to facilitate visual metering during application; and upon drying shall form a net-like film. The dried film permeability shall allow exchange of air and moisture, have an effective life of at least one year, and shall not re-emulsify when cured.

PART 4 – EXECUTION

4.1 Topsoil salvage and storage

A. Where excavation occurs through undisturbed areas, SMPA will designate appropriate areas for topsoil salvage, storage, and reapplication.
B. Upon completion of grubbing, a six to twelve-inch layer of topsoil material shall be stockpiled for reapplication.
C Temporary topsoil stockpiles that will be reapplied within one week will be lightly sprayed with water and kept under moist conditions to prevent loss by wind erosion.
D. If stockpiles will be left longer than one week prior to reapplication they shall be treated with a tackifier for temporary erosion control. Tackifier shall be mixed and applied as per the manufacturer's recommendation for dust control.
E. Topsoil shall be replaced in the same area from where it was salvaged, or as approved by SMPA. The upper six to twelve inches of trench backfill shall be replaced with salvaged topsoil and compacted per the specification.

4.2 Seeding – General

A. The Contractor shall provide SMPA a written statement or site demonstration to verify that the broadcast and drill seeding equipment have been calibrated to the specified application rates.
B. Seed labels shall be removed from the seed sacks by SMPA at the time of seeding. Seed labels will include documentation for each type of seed certifying that a recognized laboratory tested the seed within 12 months of the date of delivery. Certification shall include the following:

1. Name and address of testing laboratory.
2. Date of test.
3. Seed identification - Scientific and Variety names; Lot Number; Net Weight.
4. Test results showing the percentages of purity, germination, and weed content.

5. Noxious weed-free certification.

4.3 Seedbed Preparation

A. It is anticipated that all areas to be seeded will be characterized by loose soils. Compacted areas identified by SMPA shall be scarified or disked parallel to the slope contour to a minimum depth of four to six inches in preparation for seeding. Disking shall not occur more than one week prior to seeding.

4.4 Seed Application- Broadcast

A. Prepared seedbeds shall be uniformly broadcast seeded with hand operated canister type seeders at double the application rates given in Tables 1 and 2.
B. Large and small size seed shall be broadcast in separate applications.
C. Seeding shall not occur under conditions that would allow the seed to become wind-born.
D. Seed shall not be incorporated and applied with a hydromulch application.
E. Immediately following broadcasting, the seeded areas shall be lightly hand-raked to place the seed at a depth of 1/4 to 1/2 inch into the soil.

4.5 Seed Application – Drill

A. A rangeland drill equipped with a seed box agitator will be used for drill seeding.
B. The Contractor shall check the seed box regularly while seeding to assure that large and small size seeds are evenly distributed.
C. Depth bands on the drill will be set for proper seed placement at 1/4 to 1/2 inch into the soil.

4.6 Hydromulch

A. Hydromulch shall be applied immediately following seeding to prevent seed loss by wind activity, and to provide favorable conditions for plant growth. Under no circumstances shall seeded areas be left overnight without receiving completed mulch treatments.
B. The hydromulch emulsion shall be diluted with water as per manufacturer's recommendation.
C. The hydromulch shall be applied at a rate of 2,000 pounds per acre to form a uniform groundcover, and upon drying shall form a net-like film.
D. Hydromulch application shall not occur when temperatures are below 40 degrees F.
E. All surfaces to be treated shall be lightly sprayed with water immediately prior to application.

4.7 Geotextile

A. An erosion control blanket shall be used on slopes steeper than 3:1 (H:V) and shall be secured per the manufacturer's directions using 12 inch wood stakes.
B. Adjacent pieces shall be overlapped a minimum of six inches with up gradient pieces overlapping on top of down gradient pieces.
C. Top and bottom edges of the blanket shall be buried in trenches. A twelve (12) inch by twelve (12) inch cut-off trench shall be excavated parallel to the slope contour at the top and bottom of slope. The edge of the geotextile shall be laid into the trench and staked with twelve (12) inch wood stakes three (3) feet on center. The trench shall be backfilled and hand compacted to completely bury the up- and down-slope edges of the blanket.

END OF SECTION

THIS PAGE INTENTIONALLY LEFT BLANK