San Miguel County Building Guide

Single Family Residential Uncovered Decks and Porches

How to Use this Guide

Provide two sets of plans and complete the following

1. Complete this Building Guide

by filling in the blanks on page two, and indicating which construction details will be used.

2. Provide 2 Plot Plans

(site plan) showing dimensions of your project or addition and its relationship to existing buildings or structures on the property and the distance to existing property lines drawn to scale.

3. Fill out a Building Permit and a Development Permit Application

The majority of permit applications are processed without delay. The submitted documents will help determine if the project is in compliance with building safety codes, zoning ordinances and other applicable regulations.

Single Family Residential Uncovered Decks and Porches

Directions

1. Fill in the blanks on pages 2 and 3 with dimensions and materials which will be used to build the structure. Please print legibly.
2. Indicate in the check box which detail from page 3 will be used.

Address

_____

Deck Section

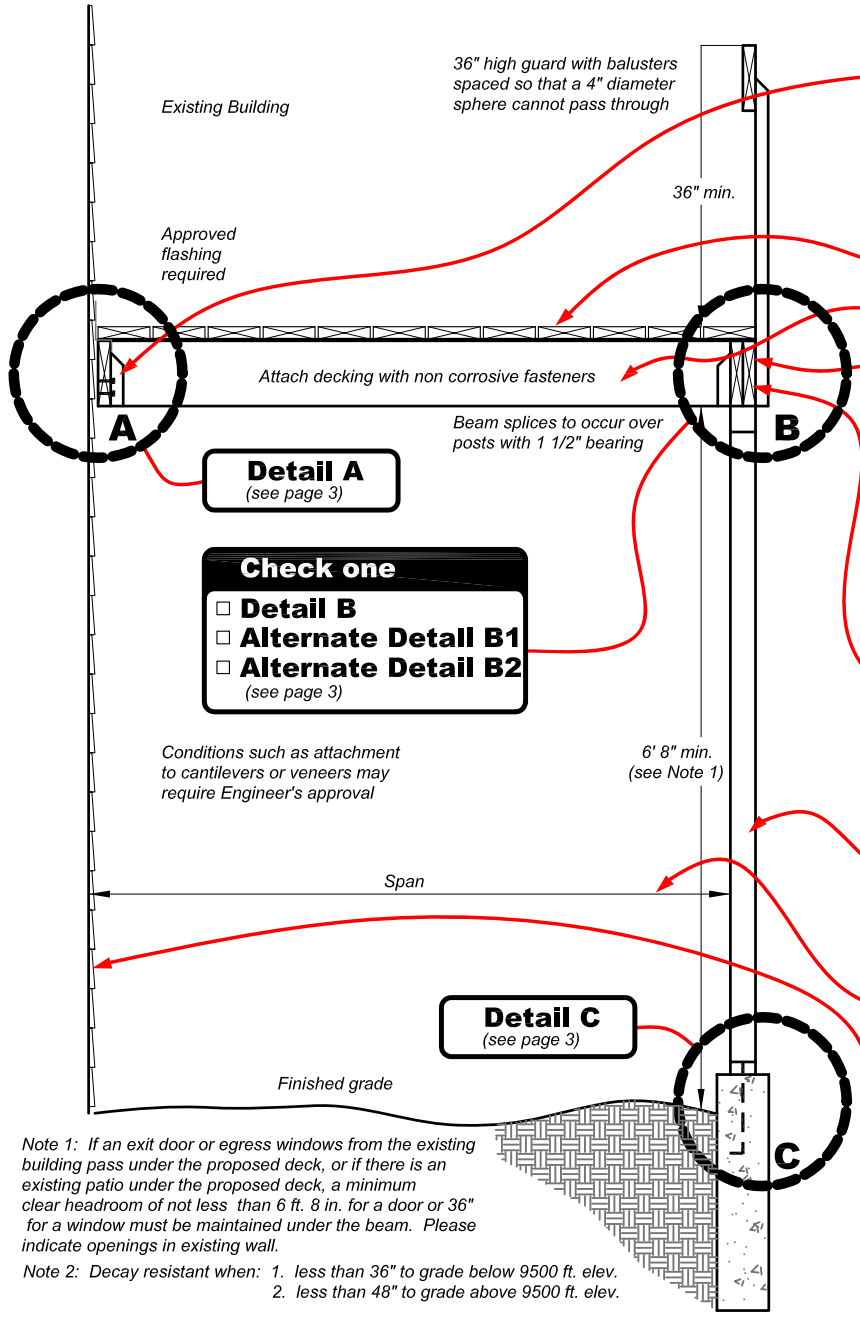

Note 1: If an exit door or egress windows from the existing building pass under the proposed deck, or if there is an existing patio under the proposed deck, a minimum clear headroom of not less than 6 ft. 8 in. for a door or 36" for a window must be maintained under the beam. Please indicate openings in existing wall.

Note 2: Decay resistant when: 1. less than 36" to grade below 9500 ft. elev.
2. less than 48" to grade above 9500 ft. elev.

Size and number of lags
_____
(example: two 3/8" x 4 1/2" lags @ 16" O.C.)

Type of decking _____ x _____ - _____
(example: 1" x 4" or 2" x 6" - Trex - See note 2)

2 x _____ joists spaced ____ in. apart
(example: 2" x 10" spaced 24" apart - See note 2)

( ) ____x ____ beam
(example: (2) 2" x 10" - see detail B)

2 x _____ rim joist
(example: 2" x 10" - see Alternate B1 & B2)

___ x _____ posts spaced ____ apart
(example: 4" x 4" posts spaced 8' apart)

Span _____
(example: 13' - 4")

Type of siding (existing)
_____

Note: A plot plan (plan view) showing the dimensions of your project or additions and its relationships to existing buildings or structures on the property must be included. In addition to project dimensions, your plot plan must also show other details such as post locations and spacing, joist and beam spans, any other pertinent information not shown on the section drawing.

Single Family Residential Uncovered Decks and Porches

Detail A

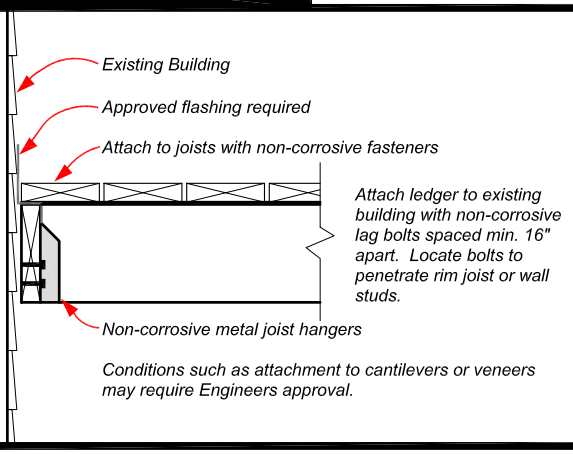

Detail B

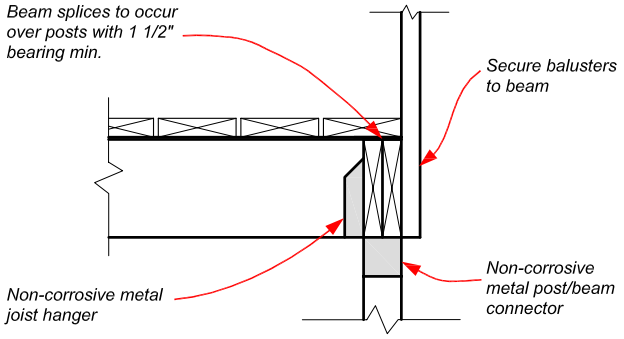

Alternate Detail B1

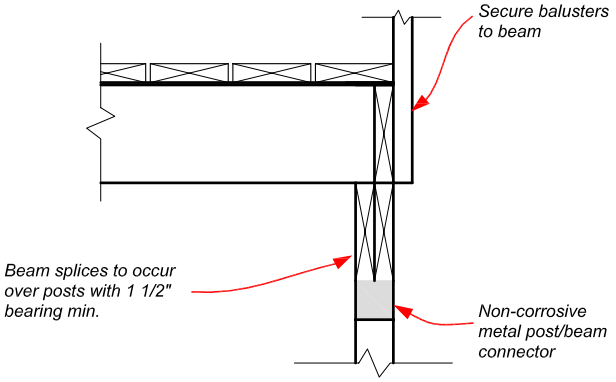

Alternate Detail B2

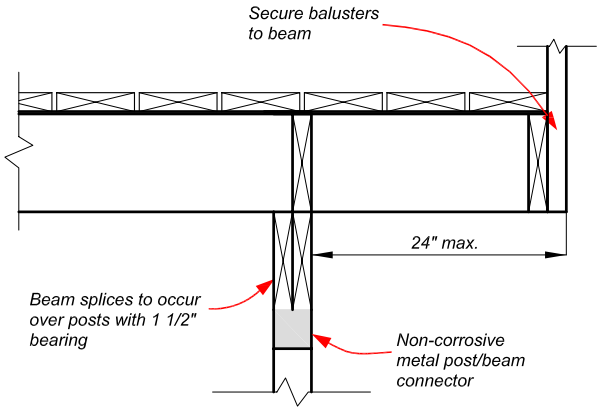

Detail C

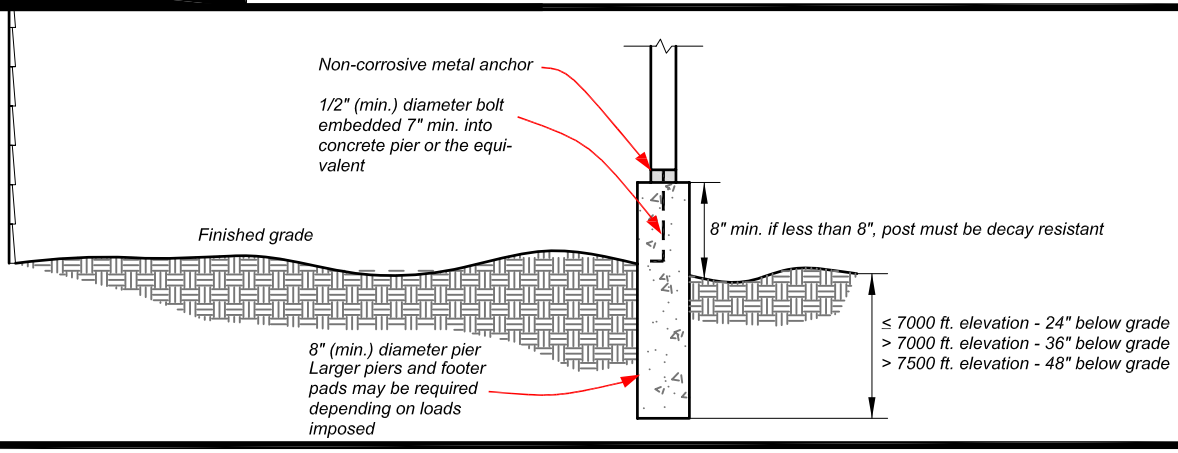

Single Family Residential Uncovered Decks and Porches

Stair & Handrail Specifications

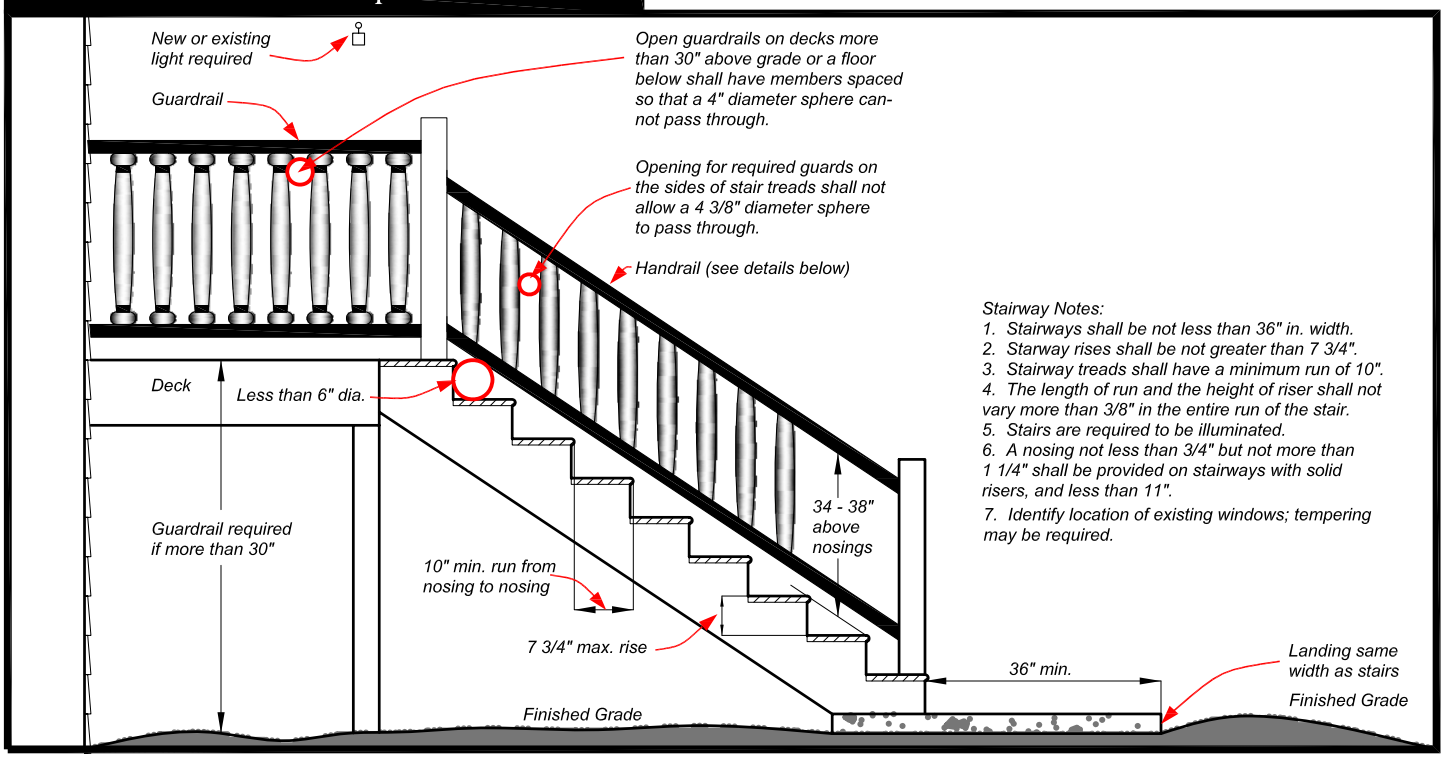

Stairway Notes:

1. *Stairways shall be not less than 36" in. width.*
2. *Starway rises shall be not greater than 7 3/4".*
3. *Stairway treads shall have a minimum run of 10".*
4. *The length of run and the height of riser shall not vary more than 3/8" in the entire run of the stair.*
5. *Stairs are required to be illuminated.*
6. *A nosing not less than 3/4" but not more than 1 1/4" shall be provided on stairways with solid risers, and less than 11".*
7. *Identify location of existing windows; tempering may be required.*

Handrail Notes:

1. *Handrails shall be continuous on at least one side of stairs with four or more risers.*
2. *Top of the handrails shall be placed not less than 34 inches nor more than 38 inches above stair nosings.*
3. *The handgrip portion of handrails shall be not less than 1 1/4 inches nor more than 2 1/4 inches in cross section for non-circular handrails.*
4. *Handrails shall be placed not less than 1 1/2 inches from any wall or other surface.*
5. *Handrails to be returned to wall, post or safety terminal (per 311.5.6.2 IRC)*

Acceptable Handrail Details

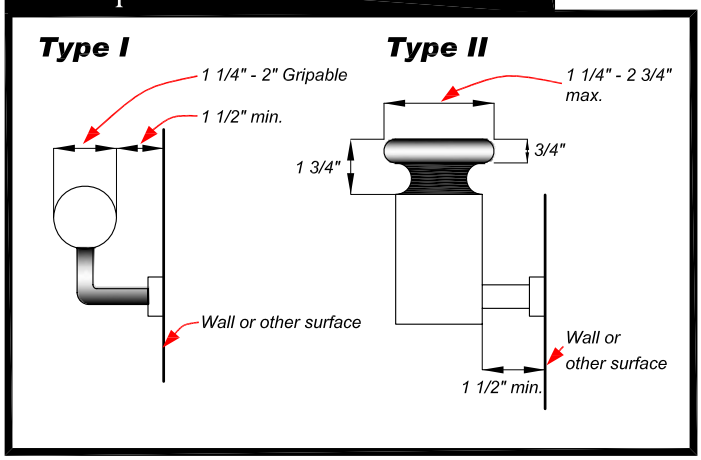
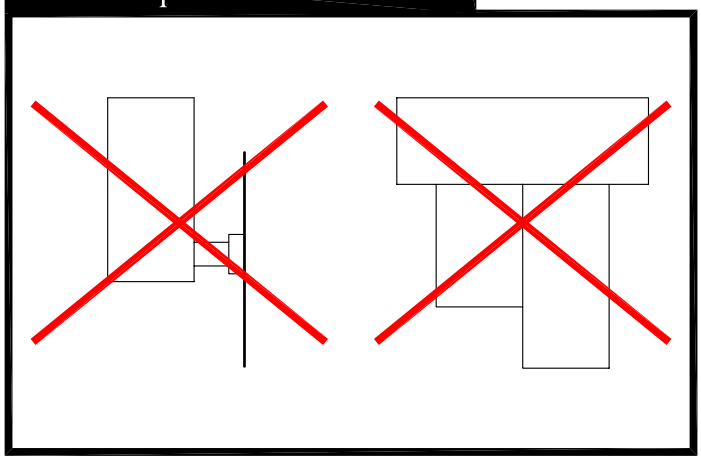
Unacceptable Handrails